Model SS-605 6-tube Super Heterodyne

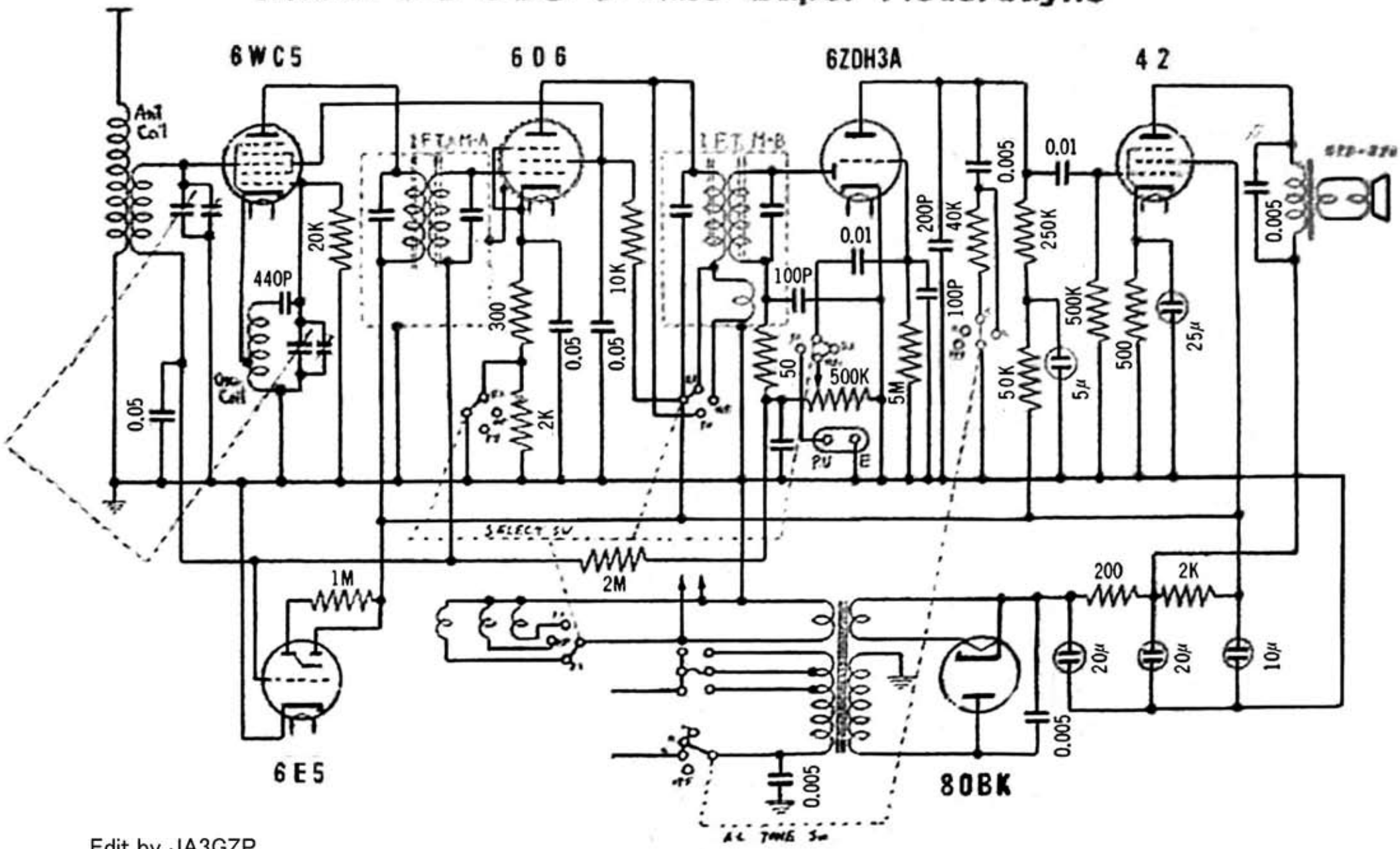

Edit by JA3GZP