SS-90 CIRCUIT DIAGRAM

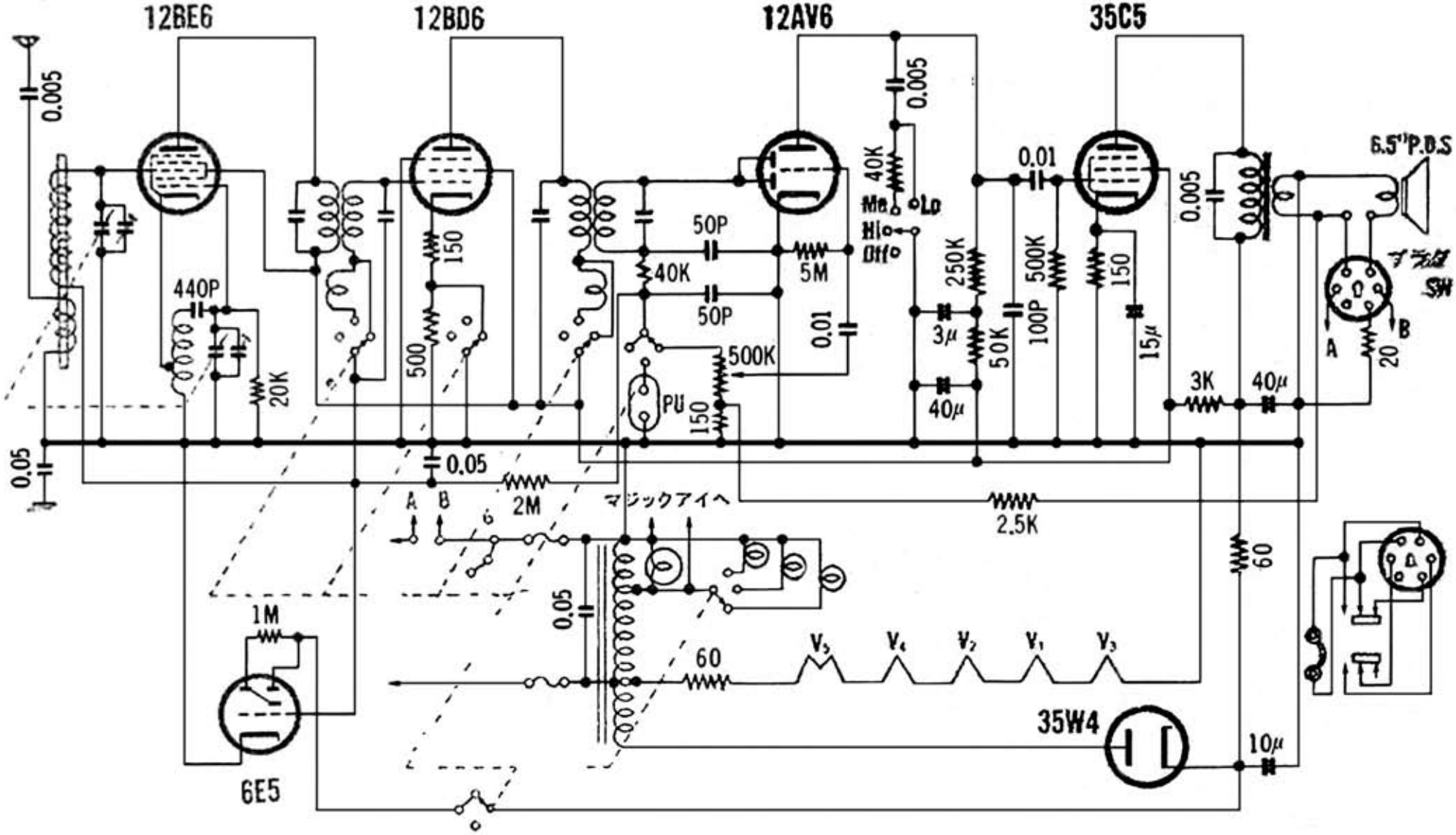

Edit by JA3GZP