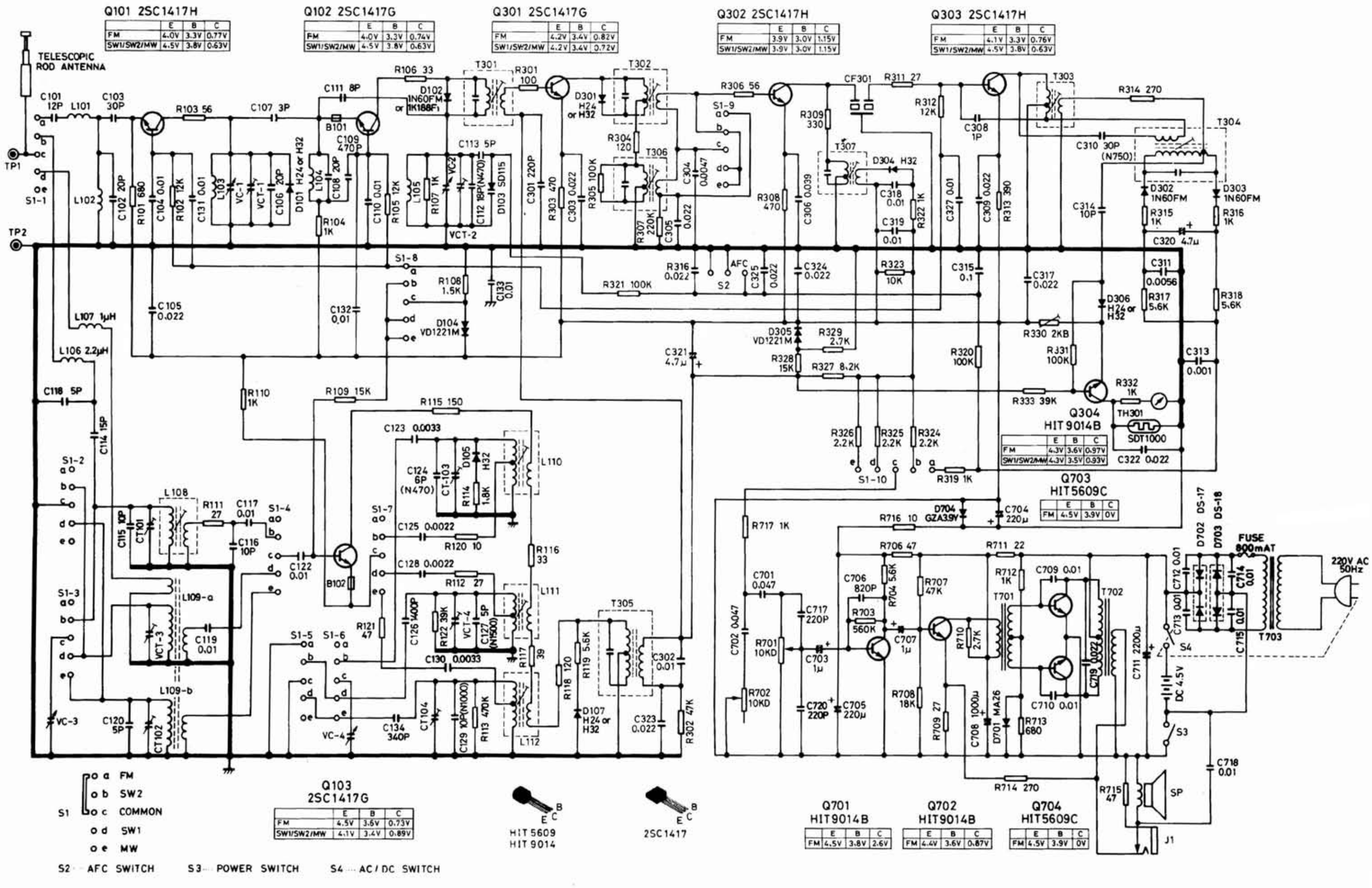# SANYO RP 8260