SANYO 8S-727

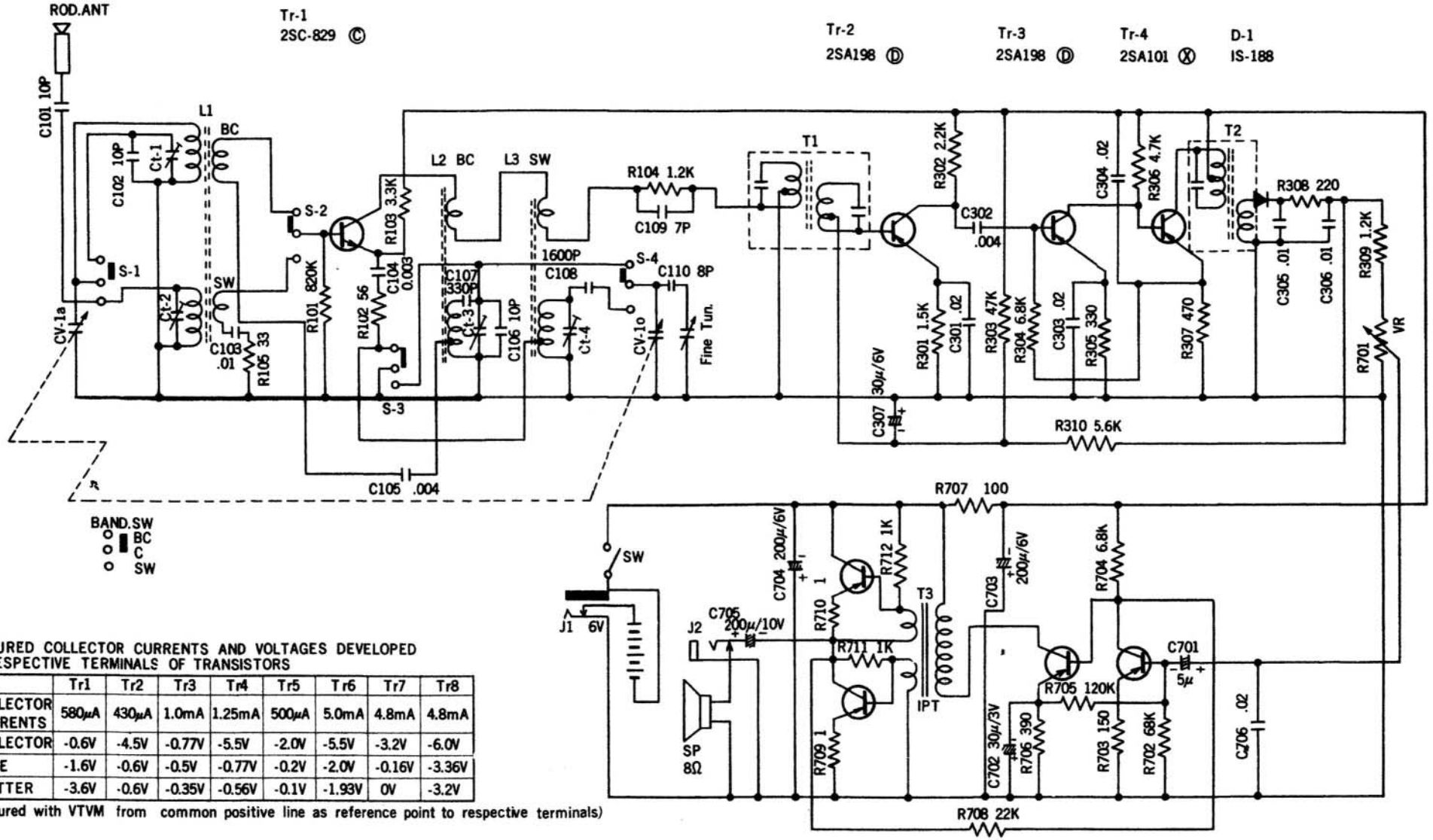

MEASURED COLLECTOR CURRENTS AND VOLTAGES DEVELOPED ON RESPECTIVE TERMINALS OF TRANSISTORS

		Tr1	Tr2	Tr3	Tr4	Tr5	Tr6	Tr7	Tr8
	COLLECTOR CURRENTS	580μA	430μA	1.0mA	1.25mA	500μA	5.0mA	4.8mA	4.8mA
VOLTAGE	COLLECTOR	-0.6V	-4.5V	-0.77V	-5.5V	-2.0V	-5.5V	-3.2V	-6.0V
	BASE	-1.6V	-0.6V	-0.5V	-0.77V	-0.2V	-2.0V	-0.16V	-3.36V
	EMITTER	-3.6V	-0.6V	-0.35V	-0.56V	-0.1V	-1.93V	0V	-3.2V

(Measured with VTVM from common positive line as reference point to respective terminals)

NOTE: 1. Capacitors shown in micro farads (μF) unless otherwise stated. p = pF = micro-micro farad.
2. Resistors shown in ohms. K = 1000 ohms.