# SANYO 8U-P30

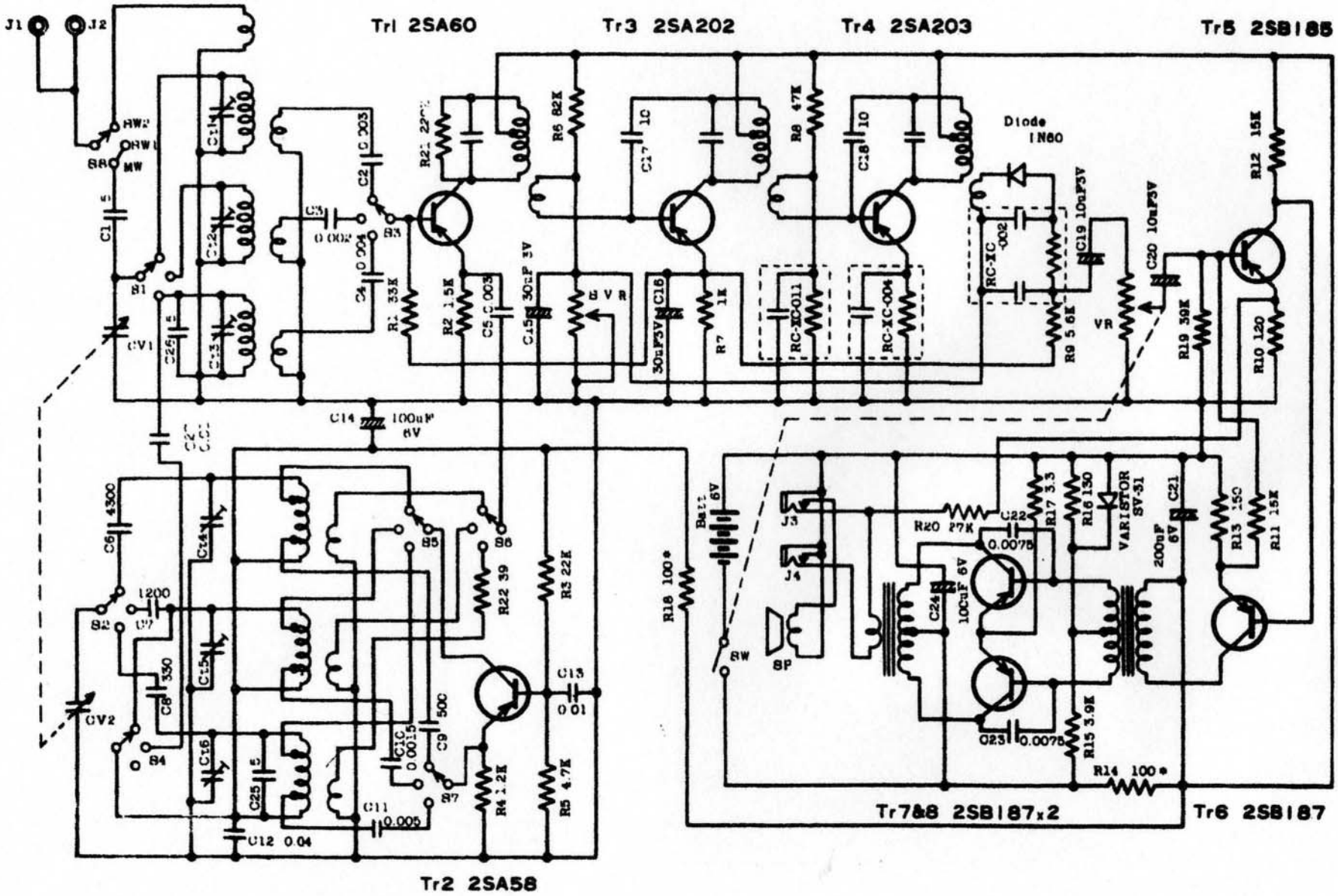
J1
J2
Tr1 2SA60
Tr3 2SA202
Tr4 2SA203
Tr5 2SB185
Diode
1N60
Tr7&8 2SB187x2
Tr6 2SB187
Tr2 2SA58
CV1
CV2
SW2
SW1
MW
S8
S1
S2
S3
S4
S5
S6
S7
SW
SP
Batt
6V
C14
100uF
6V
C15
30uF 3V
C16
30uF3V
C19
10uF3V
C20
10uF3V
C21
200uF
6V
C24
100uF 6V
VR
VARISTOR
SV-51
R18
100Ω
R14
100Ω