MODEL FM-20

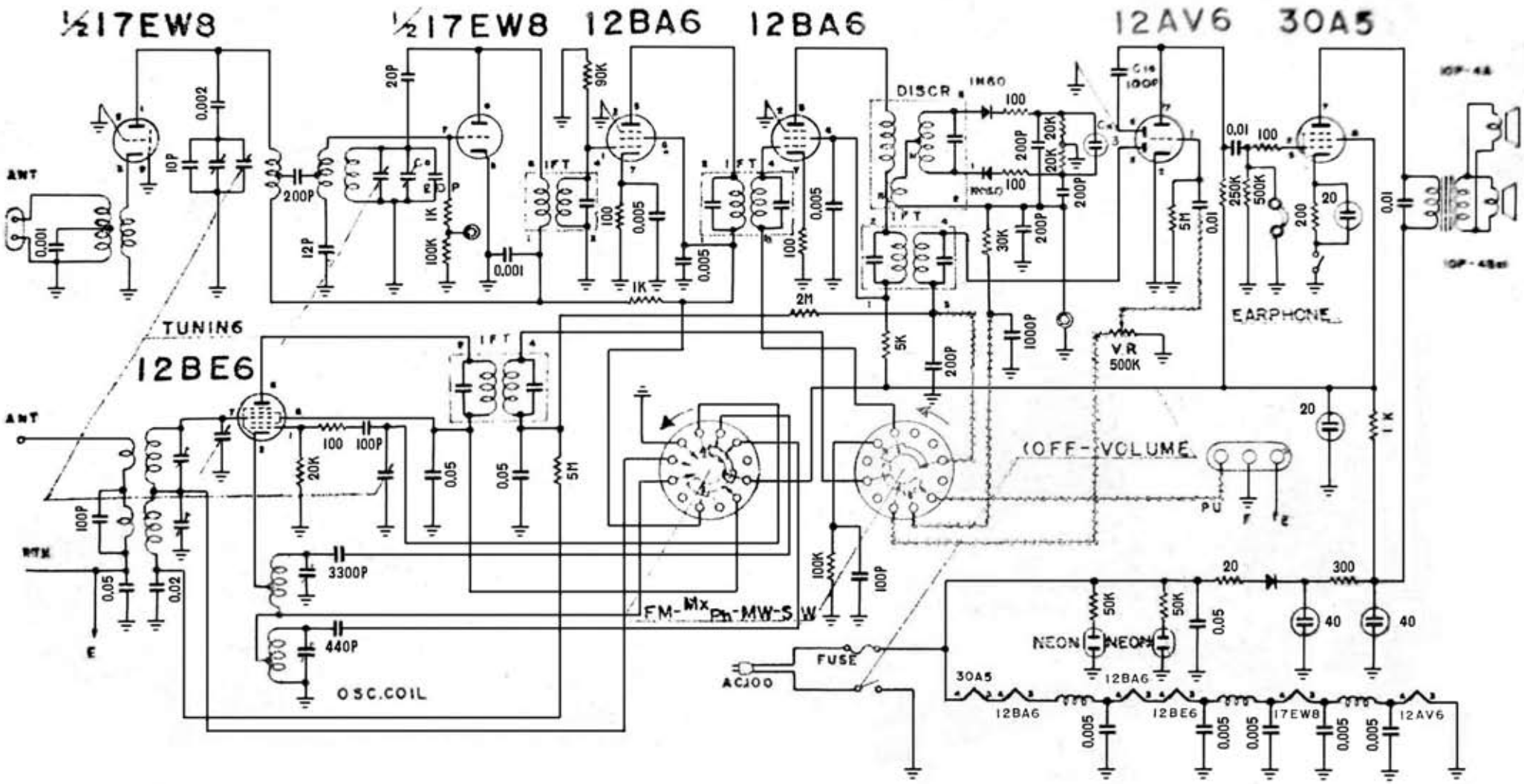

Edit by JA3GZP