SHARP BP-300 / BP-303

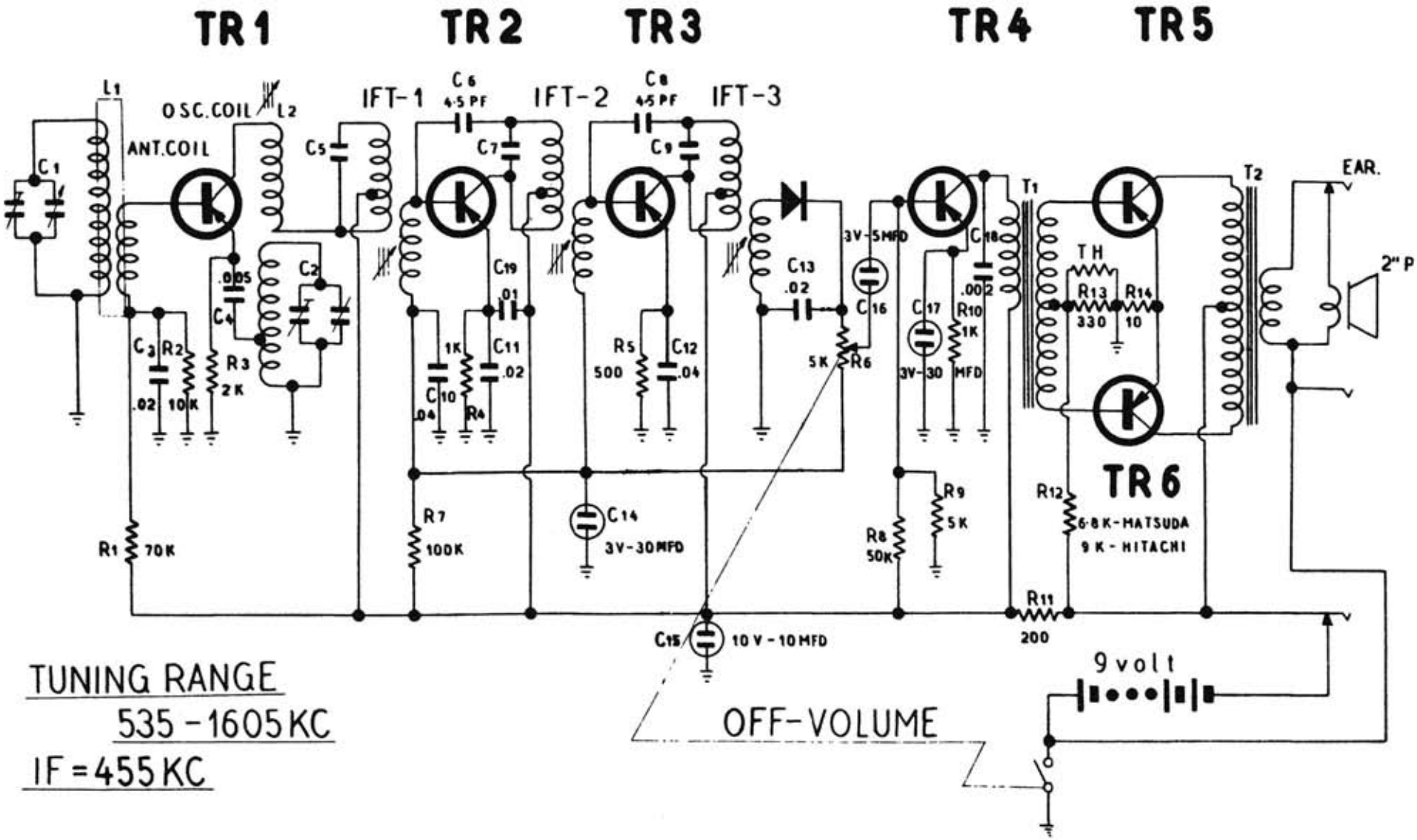

TUNING RANGE
535 - 1605 KC
IF = 455 KC

SERVICE MANUAL