SHARP BP-305 / BP-306

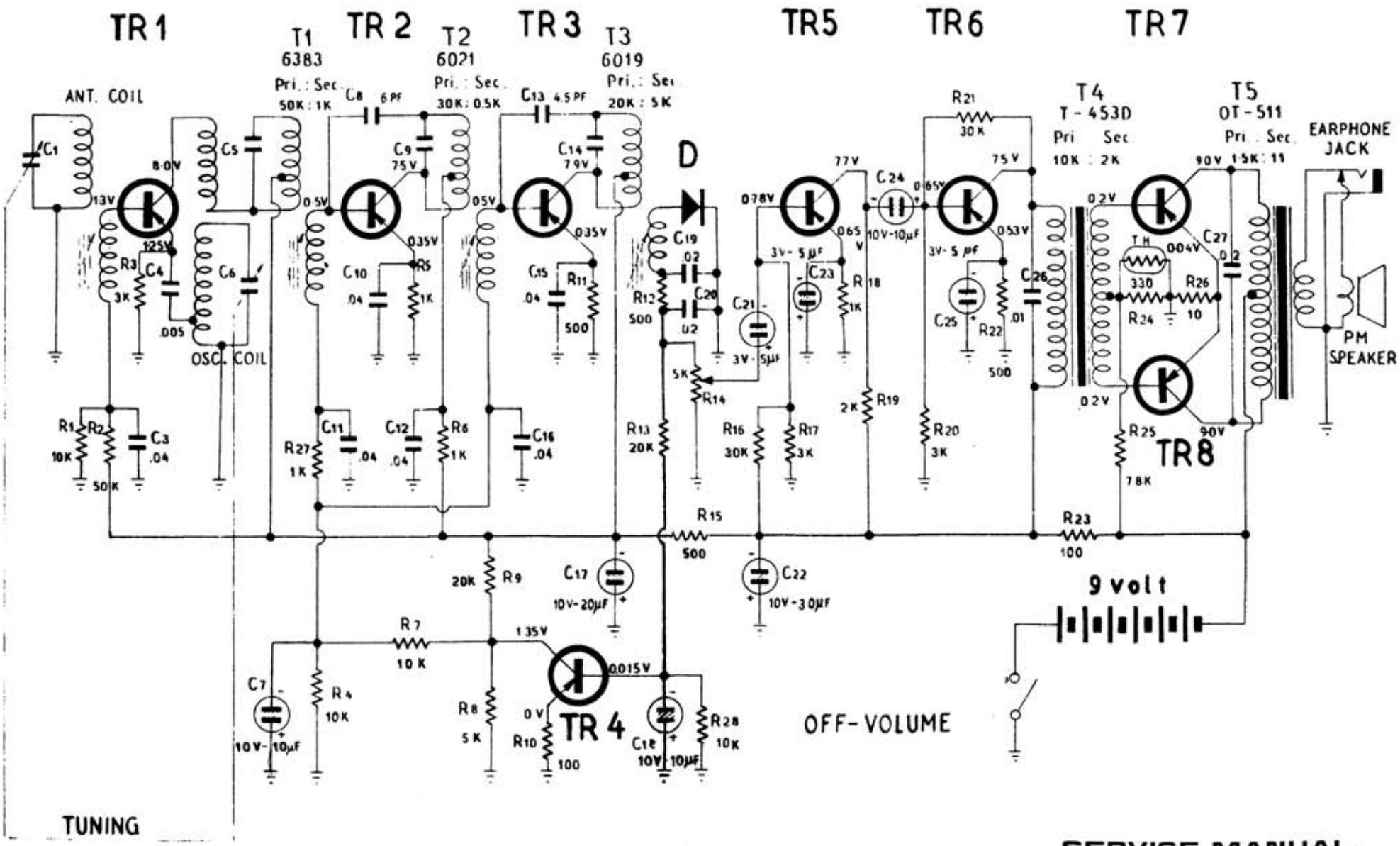

SERVICE MANUAL