SHARP BX-325

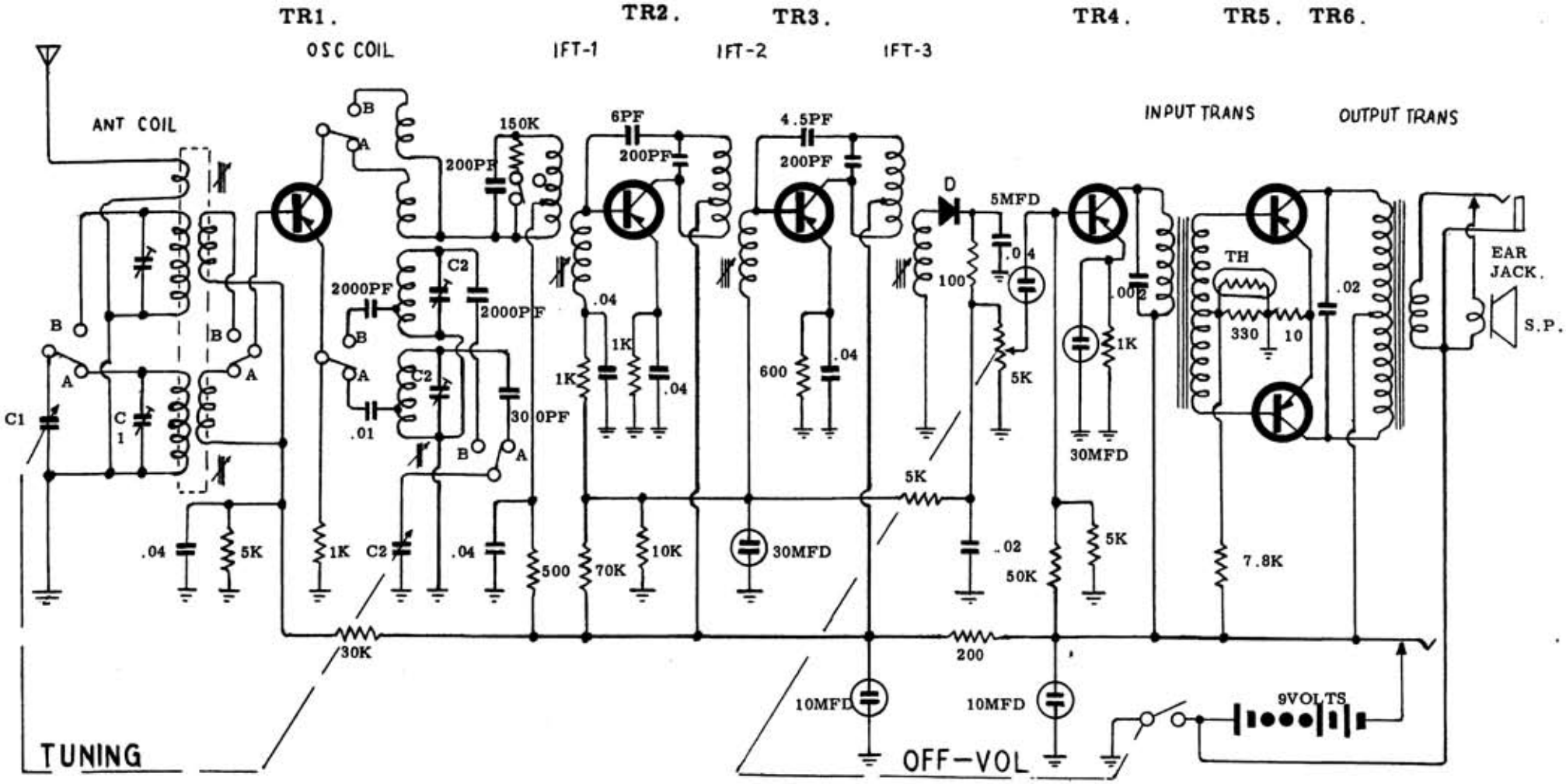

IF=455KC TUNING RANGE A : 535-1605KC
B : 3.9-12MC

SERVICE MANUAL