SHARP BY-412

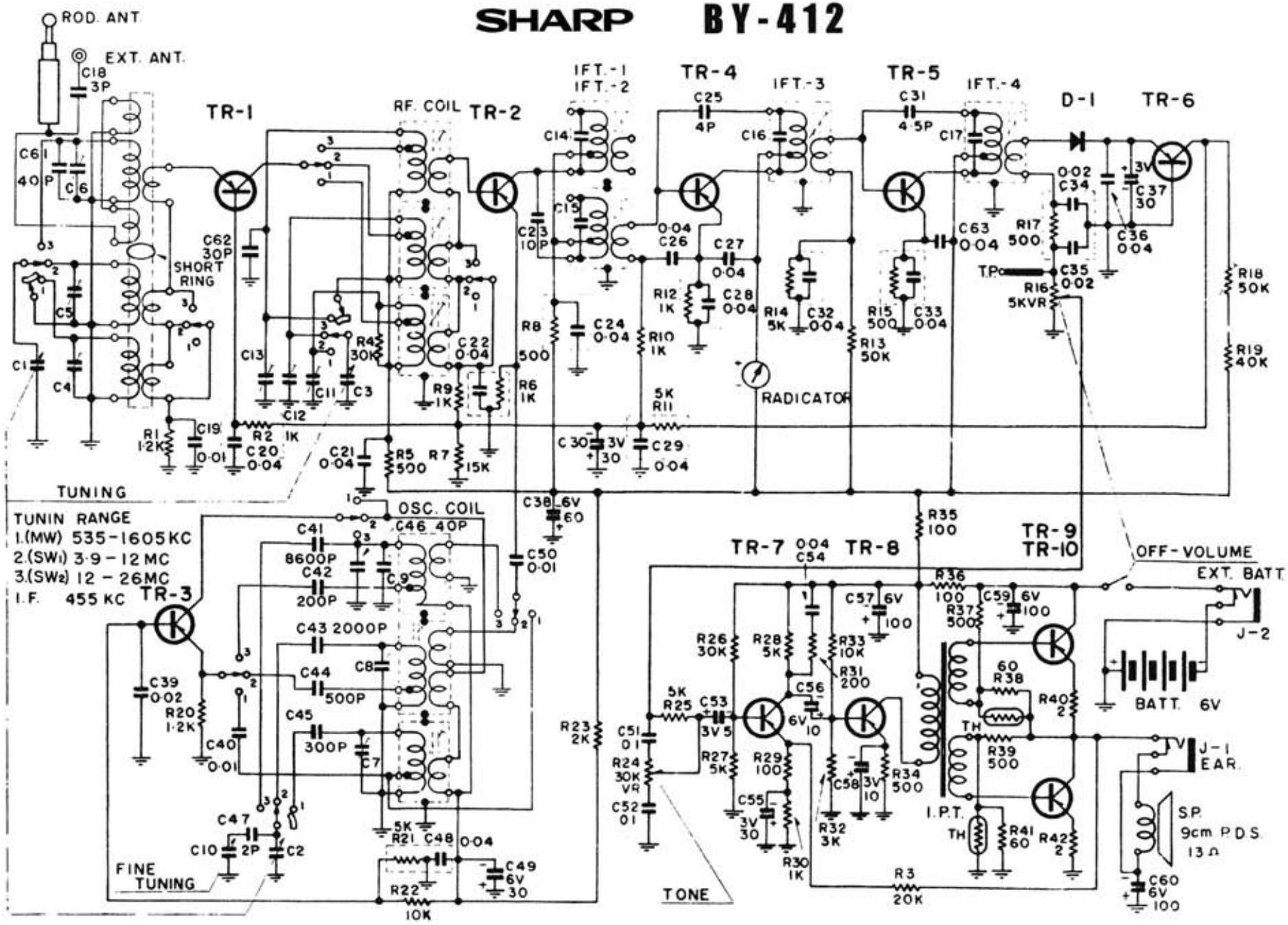

SERVICE MANUAL