SHARP BZ-480

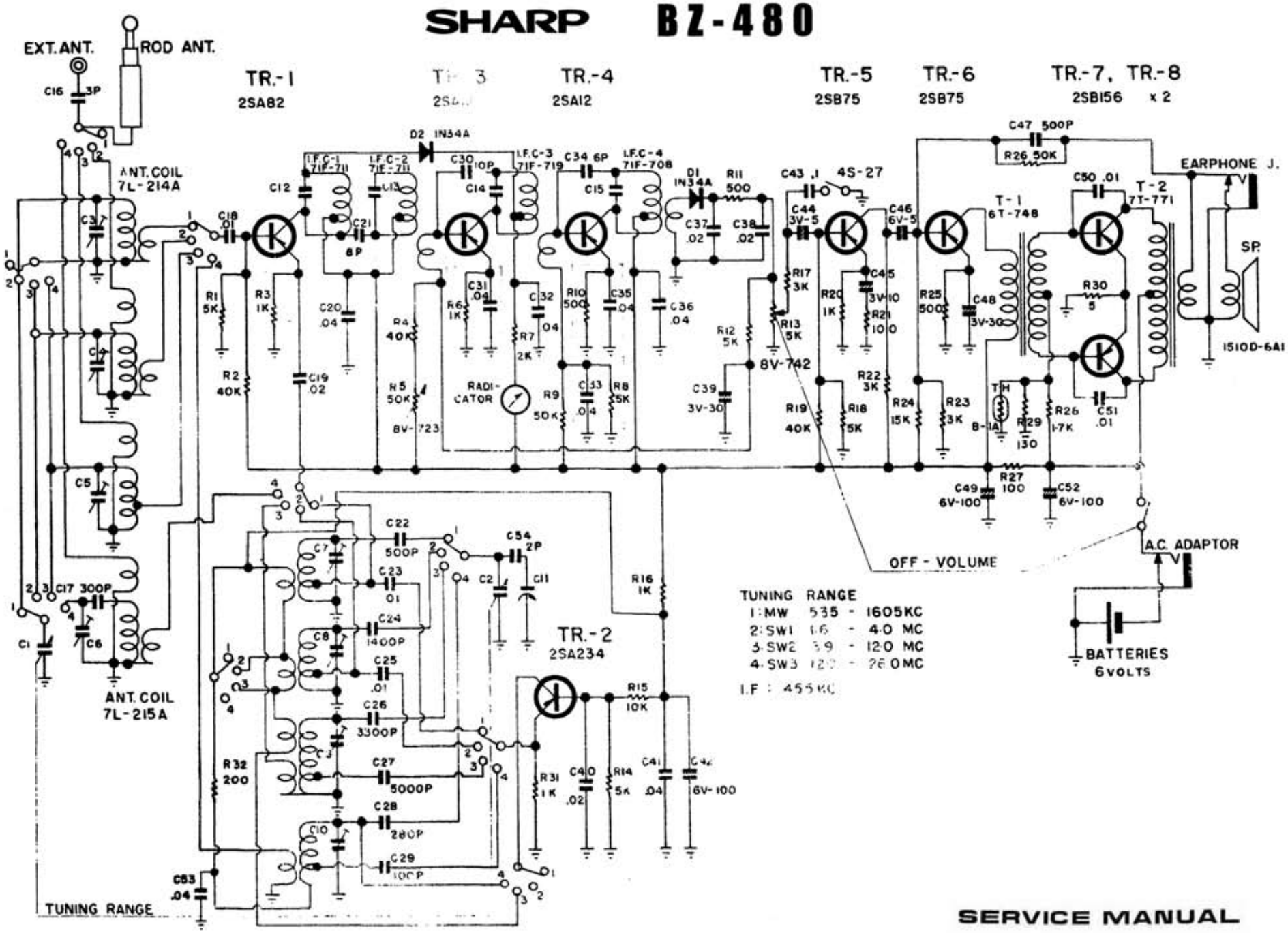

SERVICE MANUAL