SHARP TR-158 / TR-181

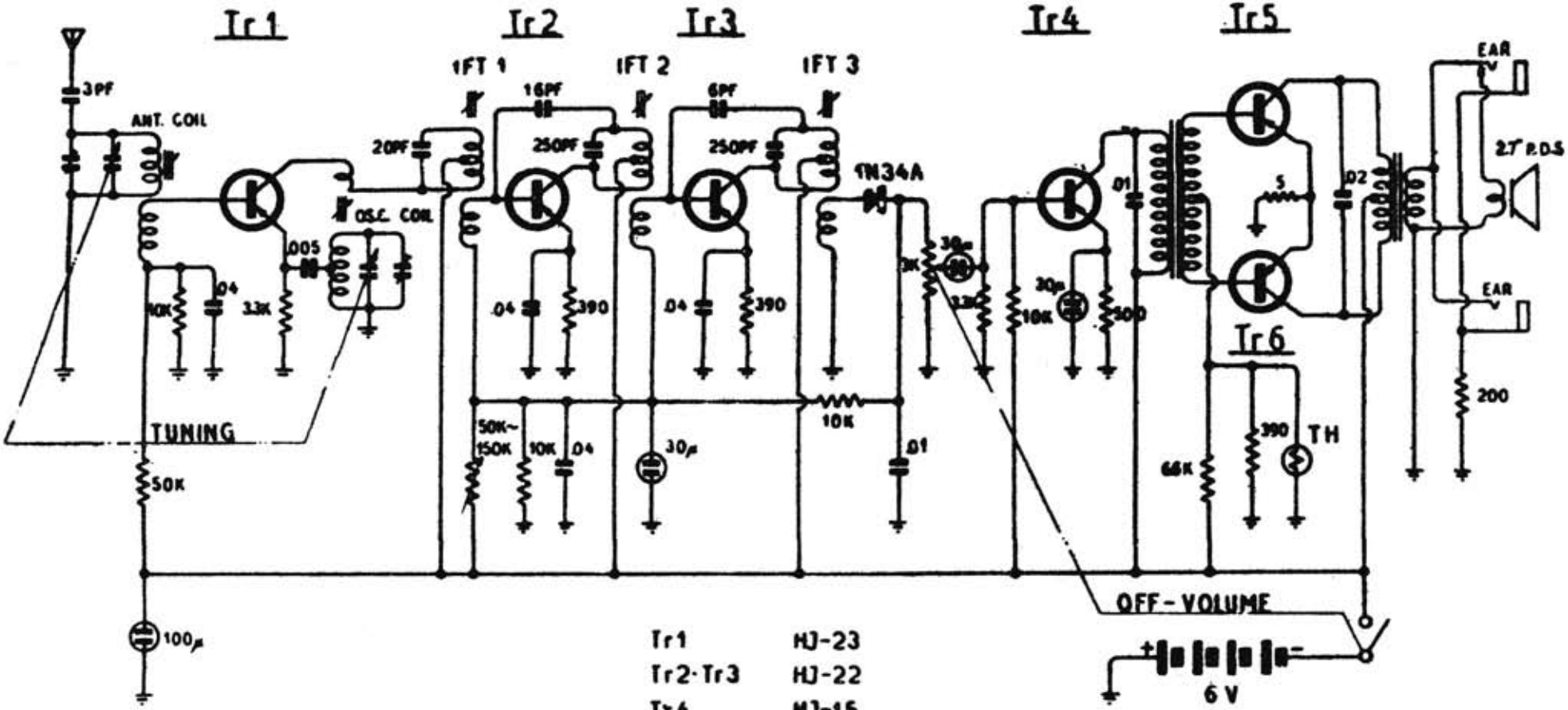

Tr1	HJ-23
Tr2·Tr3	HJ-22
Tr4	HJ-15
Tr5·Tr6	HJ-17
TH	B-2B

TUNING RANGE	535-1605KC
I F	455 KC

SERVICE MANUAL