# SHARP TR-175

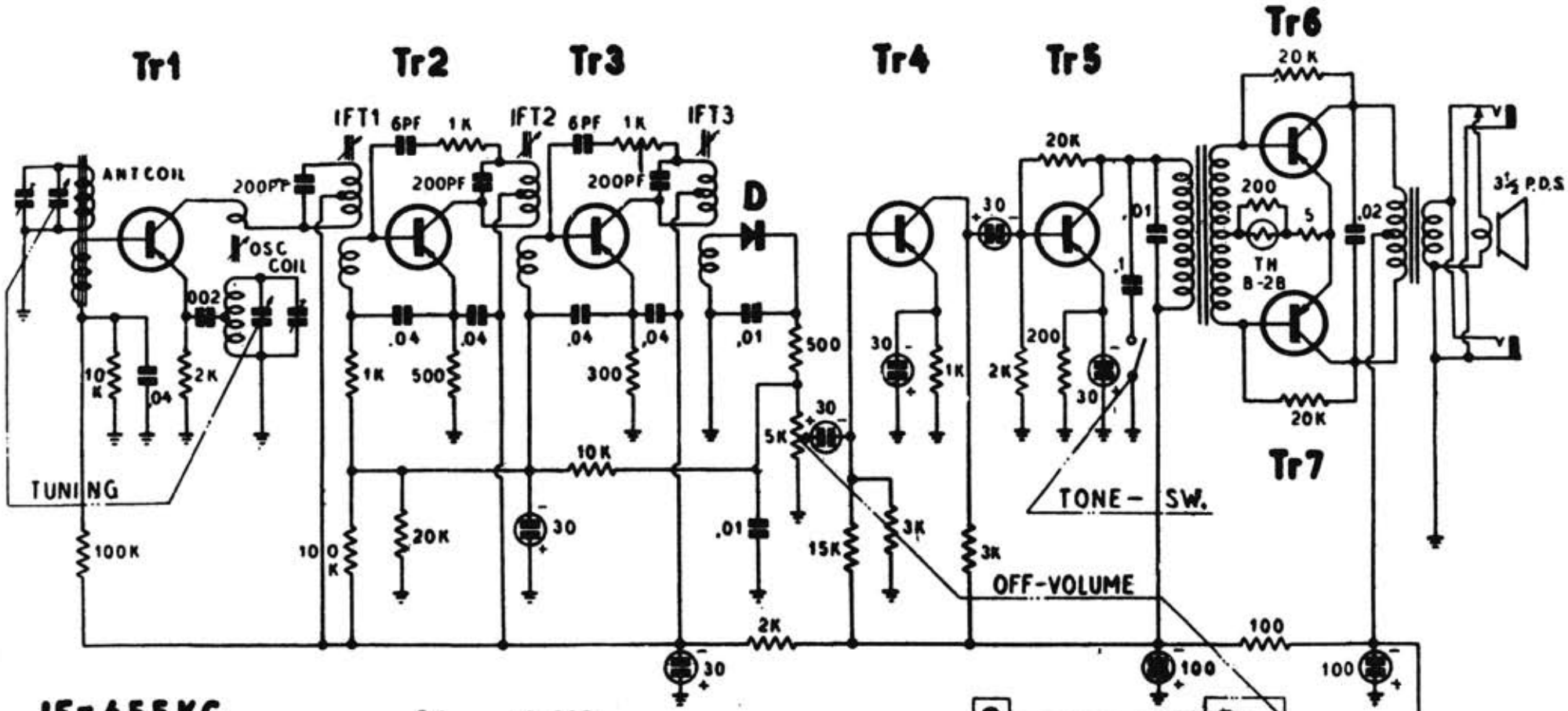


IF=455KC
TUNING RANGE
535-1605KC

| | |
|---|---|
| Tr1 | HJ-23D |
| Tr2 Tr3 | HJ-22D |
| Tr4 Tr5 | HJ-15 |
| Tr6 Tr7 | HJ-17 |
| D | 1N34A |

SERVICE MANUAL