MODEL 6H-238

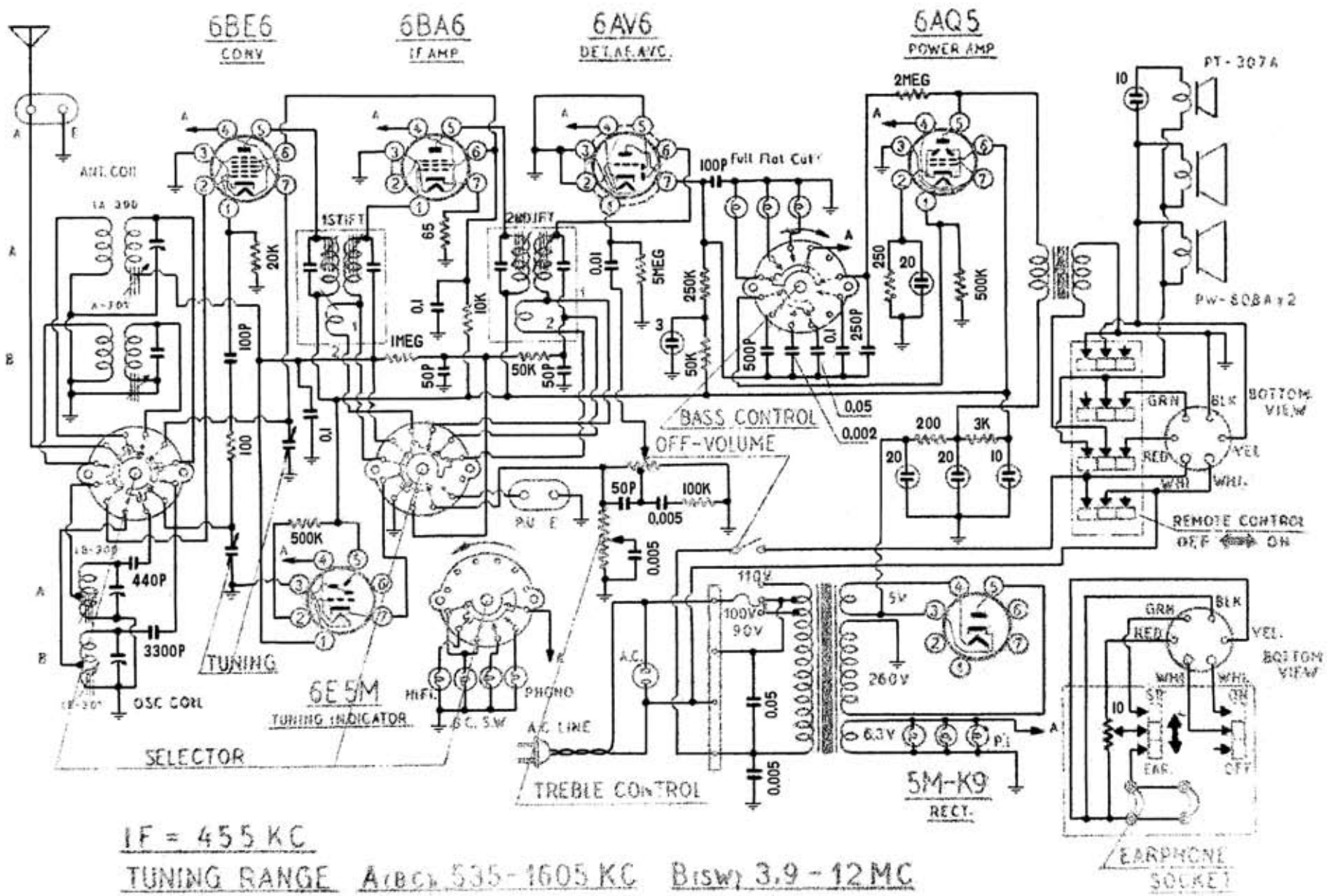

Edit by JA3GZP