MODEL 5P-70

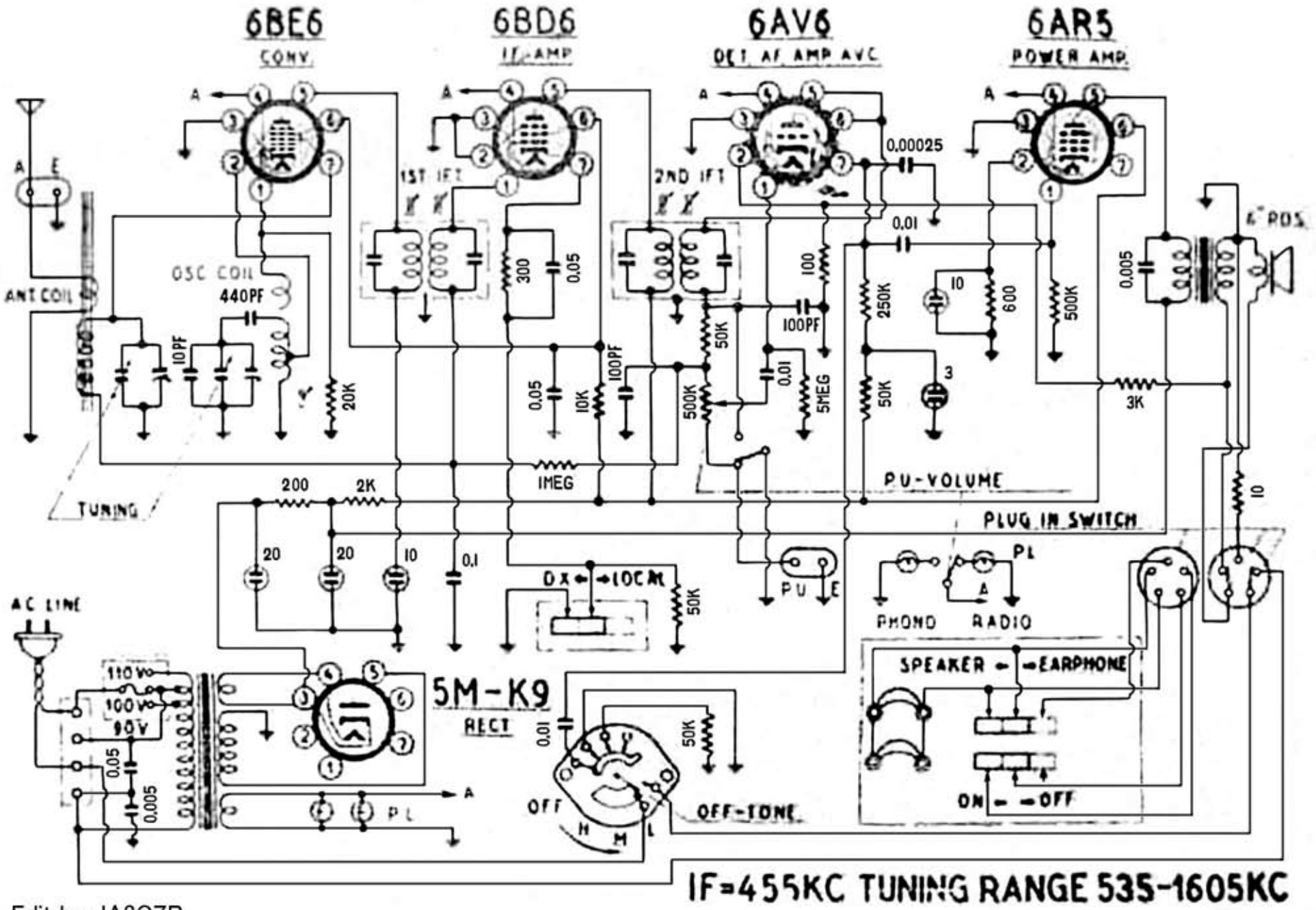

Edit by JA3GZP