MODEL 5U-150

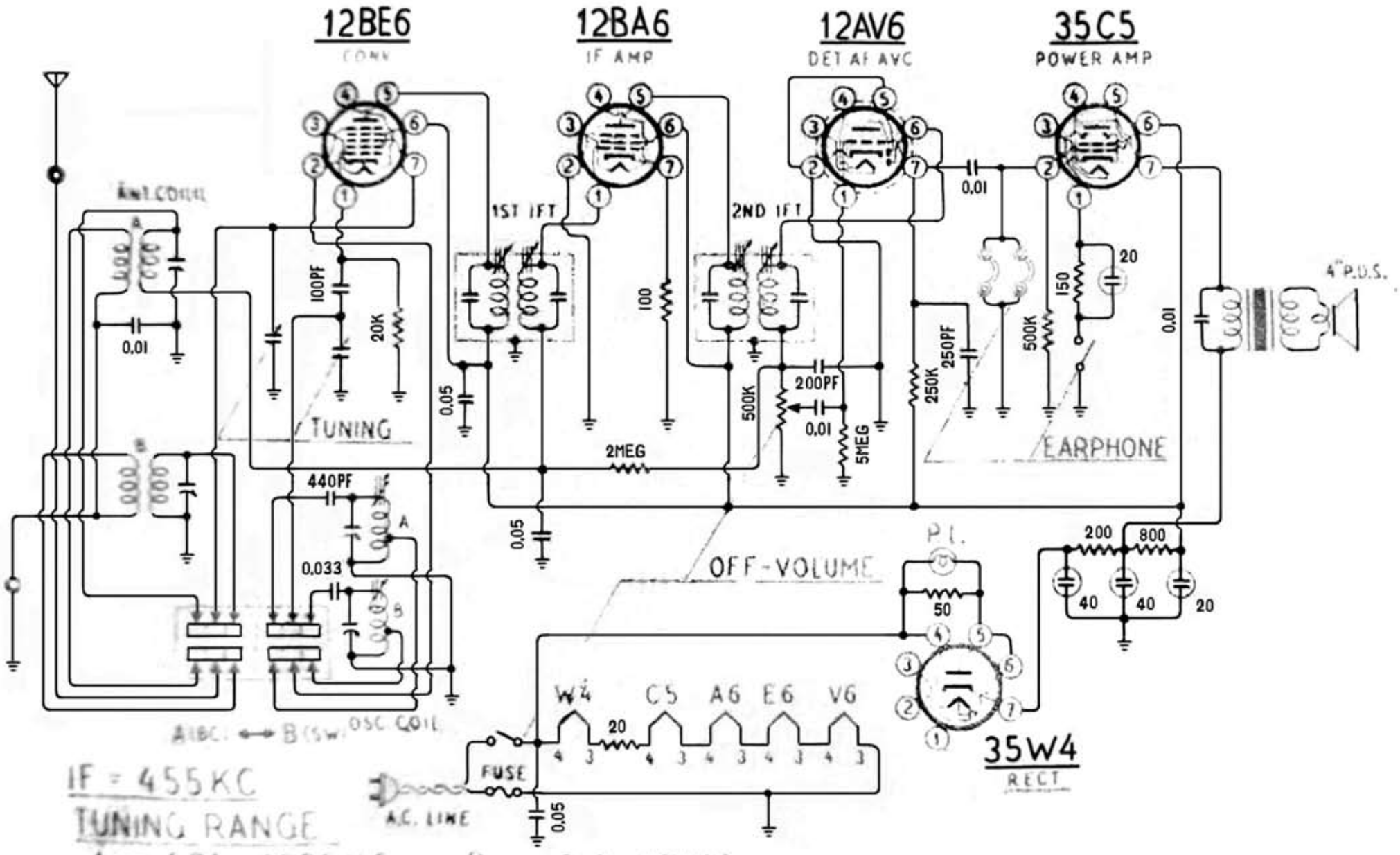

Edit by JA3GZP