SILVER RADIO

MODEL RT-500

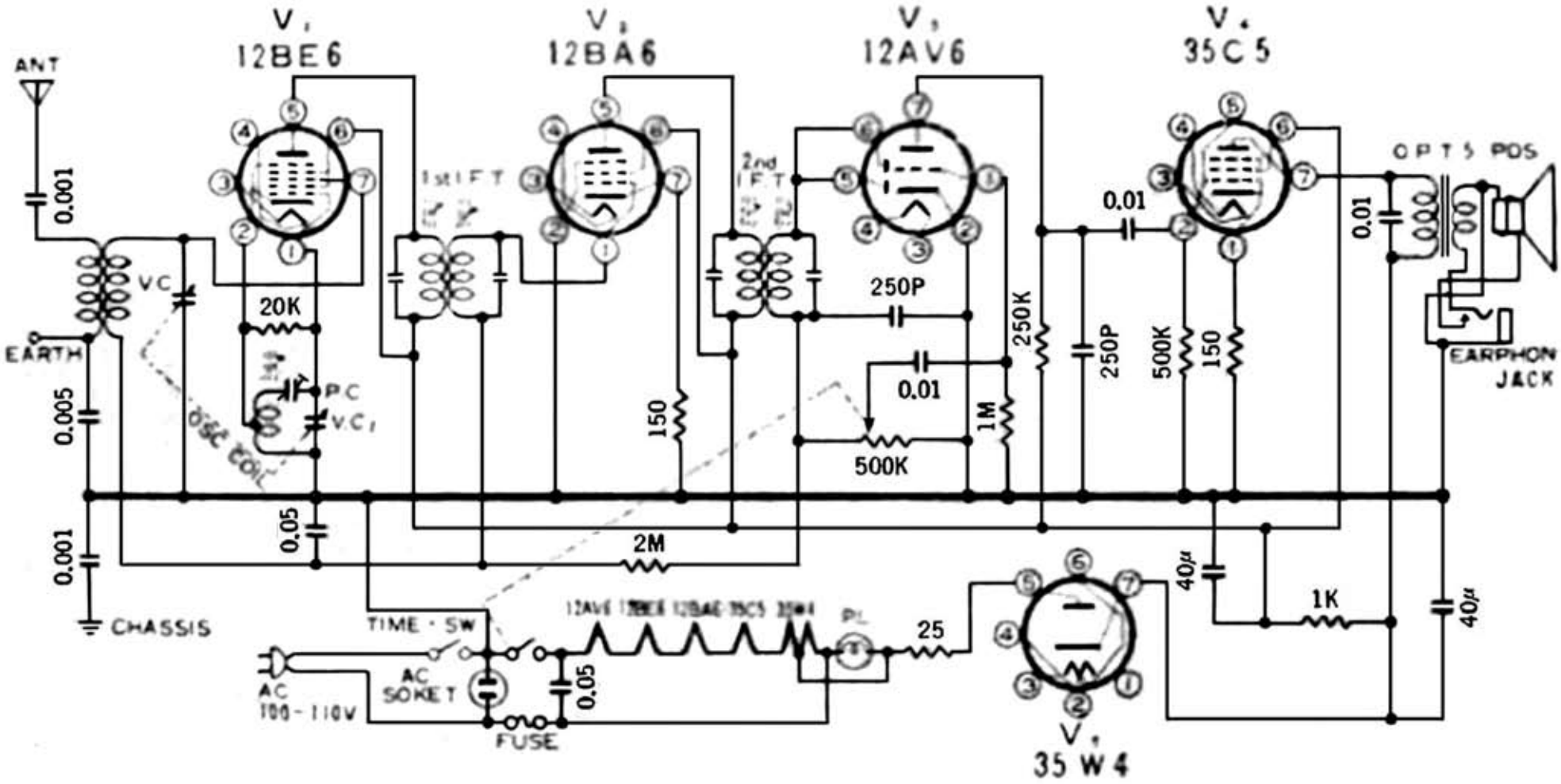

Edit by JA3GZP