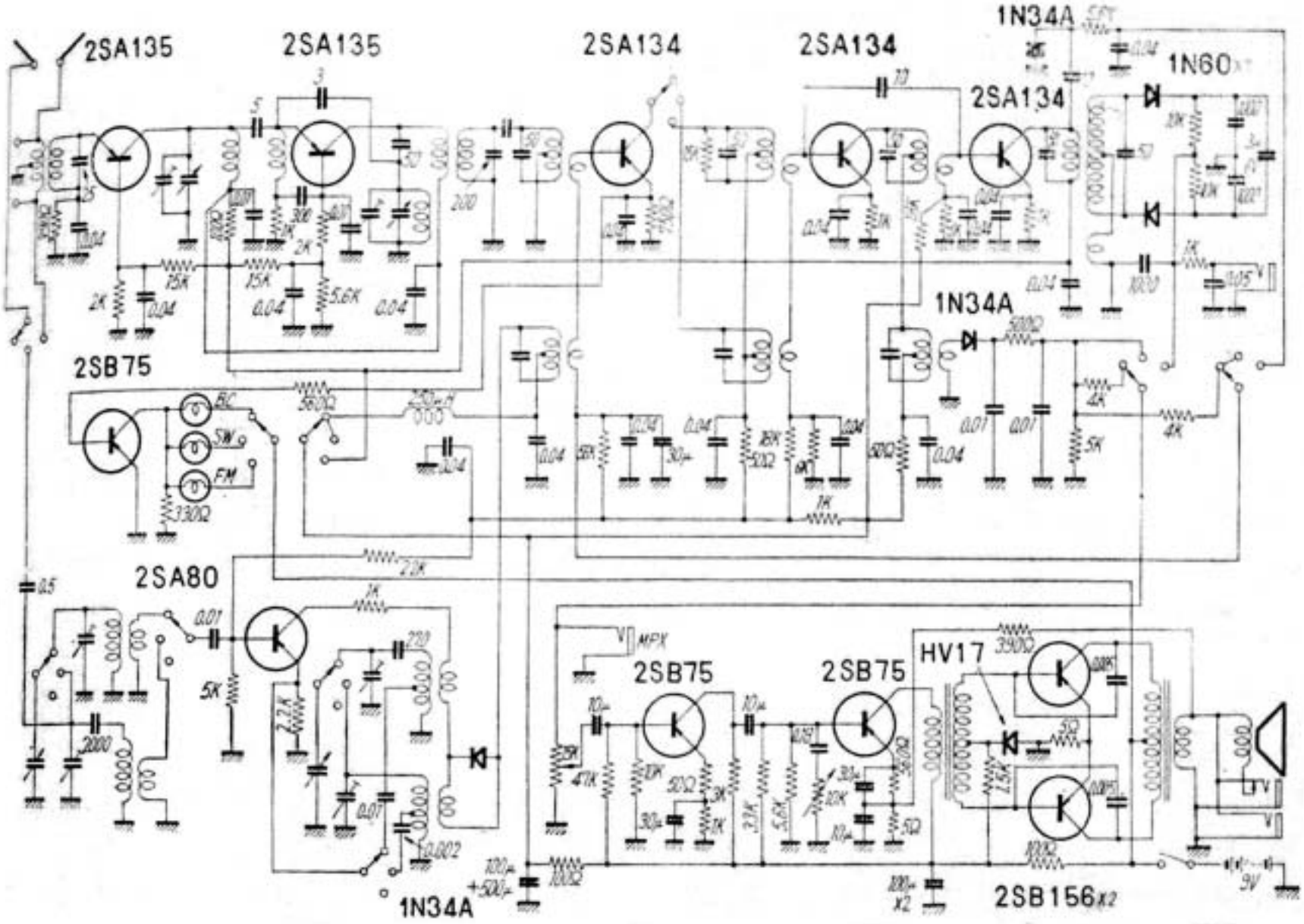

シルバー　11TF500

SILVER MODEL 11TF-500

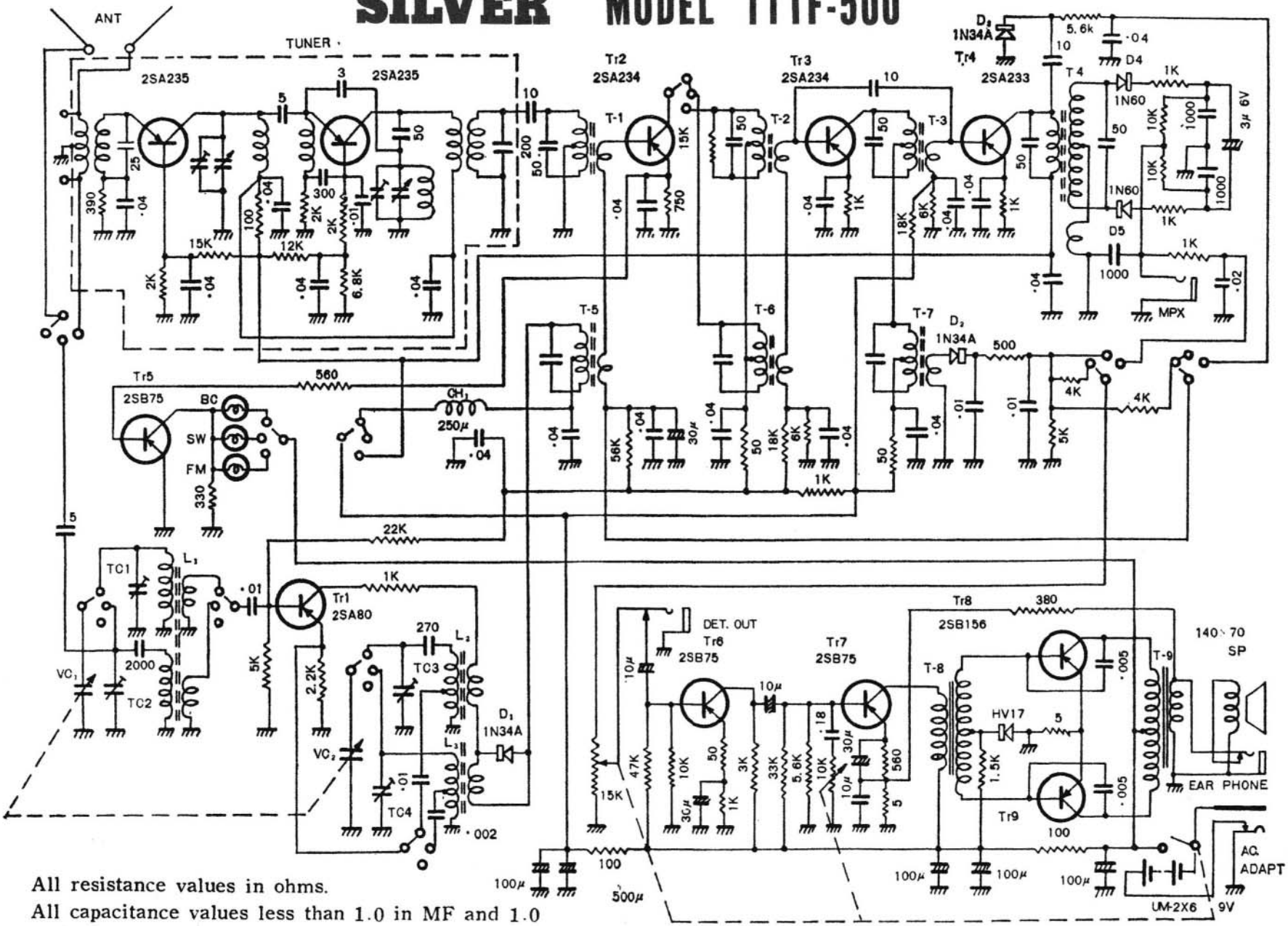

All resistance values in ohms.
All capacitance values less than 1.0 in MF and 1.0 and above in MMF unless specified.