SILVER MODEL 7TS-190

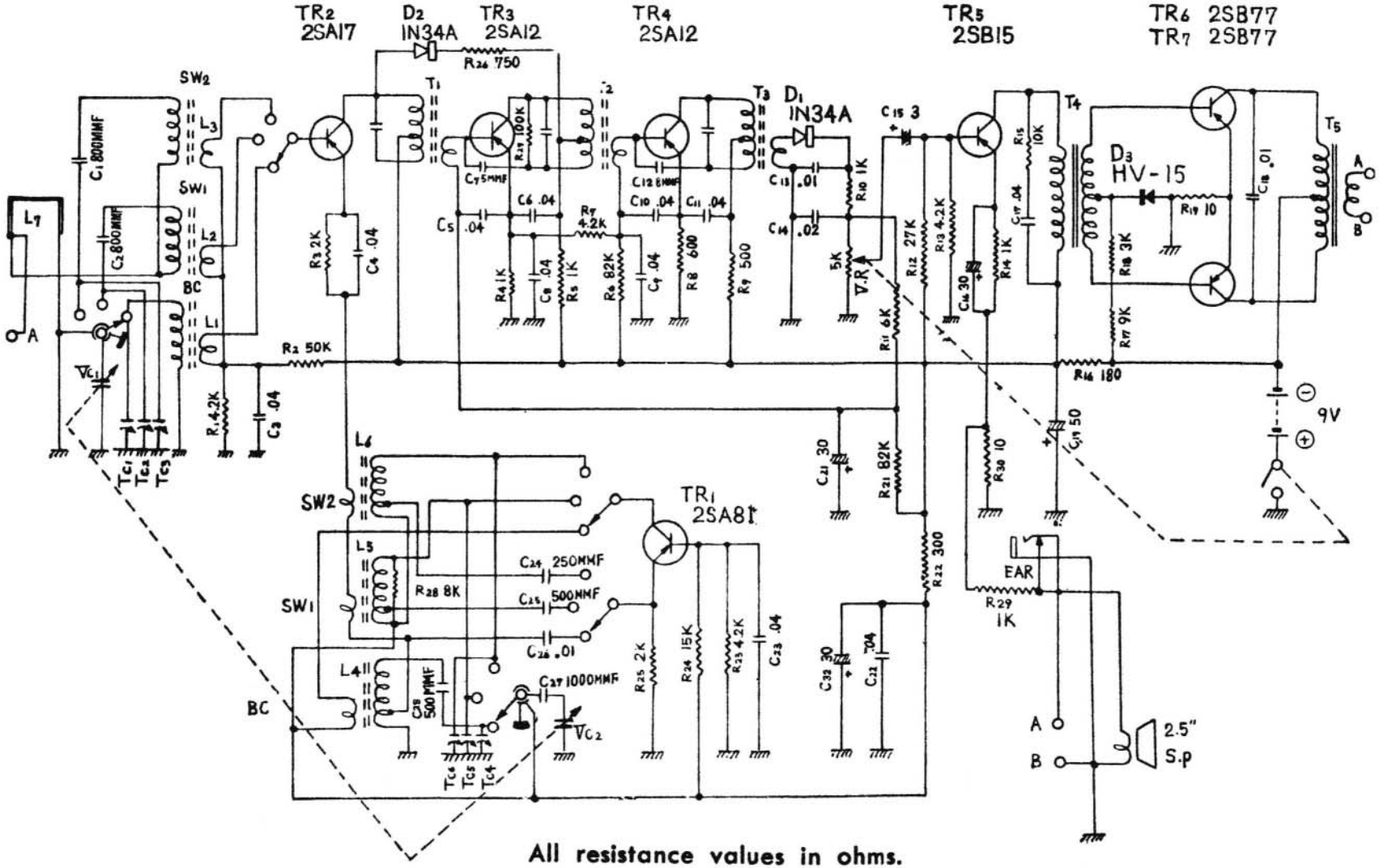

All resistance values in ohms.
All capacitance values in MF except those indicated.