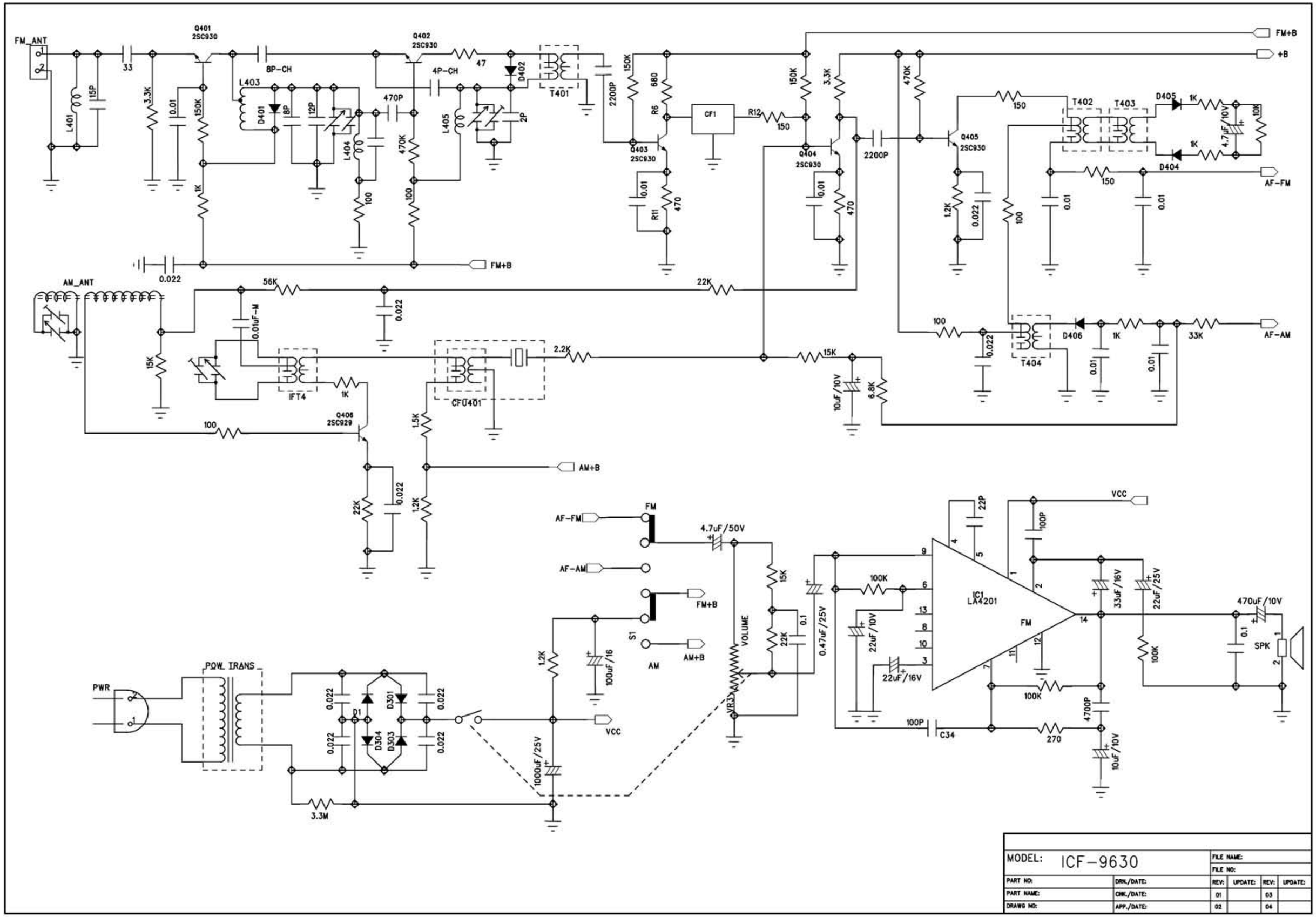DRAWG SIZE: A3