SONY TFM-850W

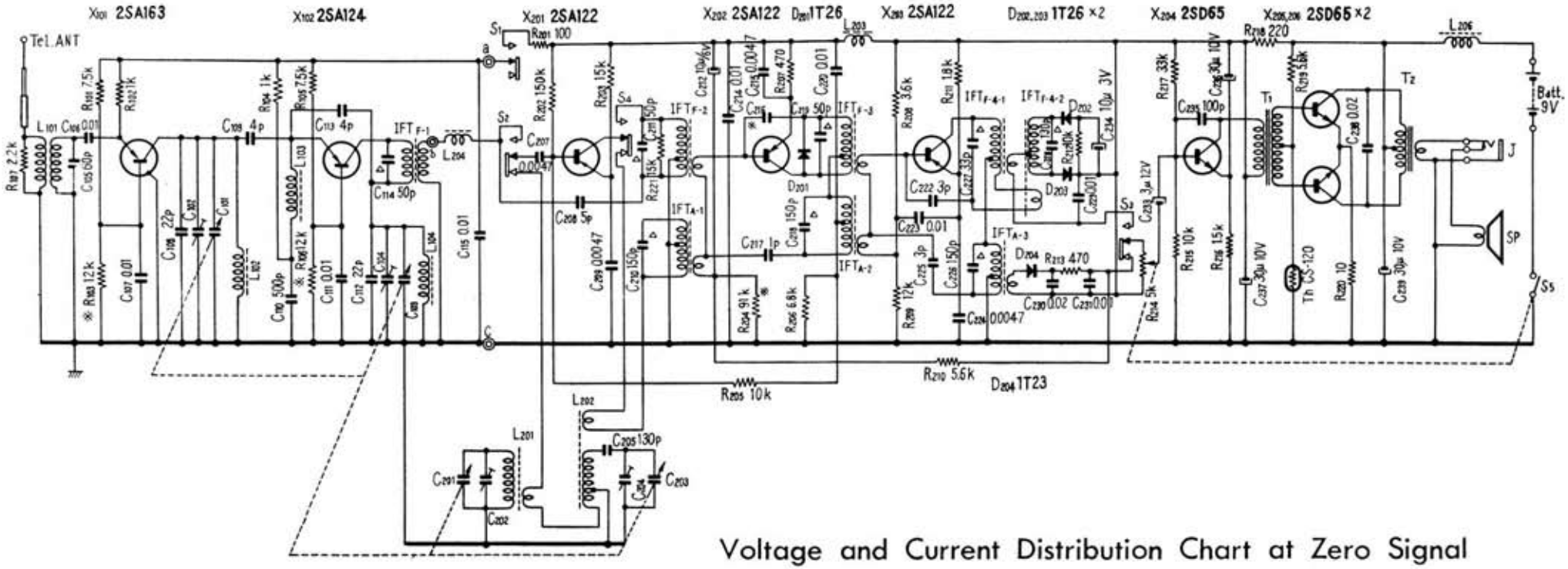

Voltage and Current Distribution Chart at Zero Signal

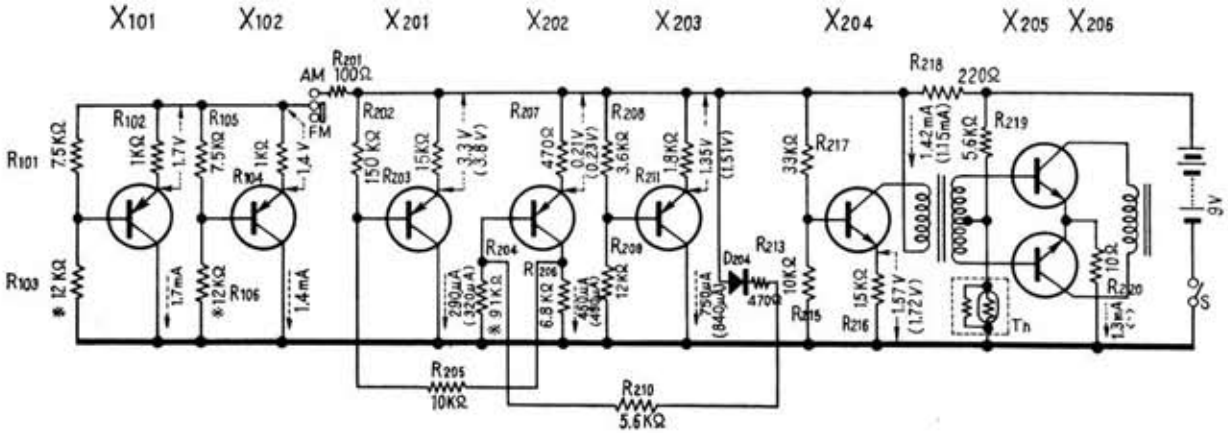

Service Guide