SONY TR-1010

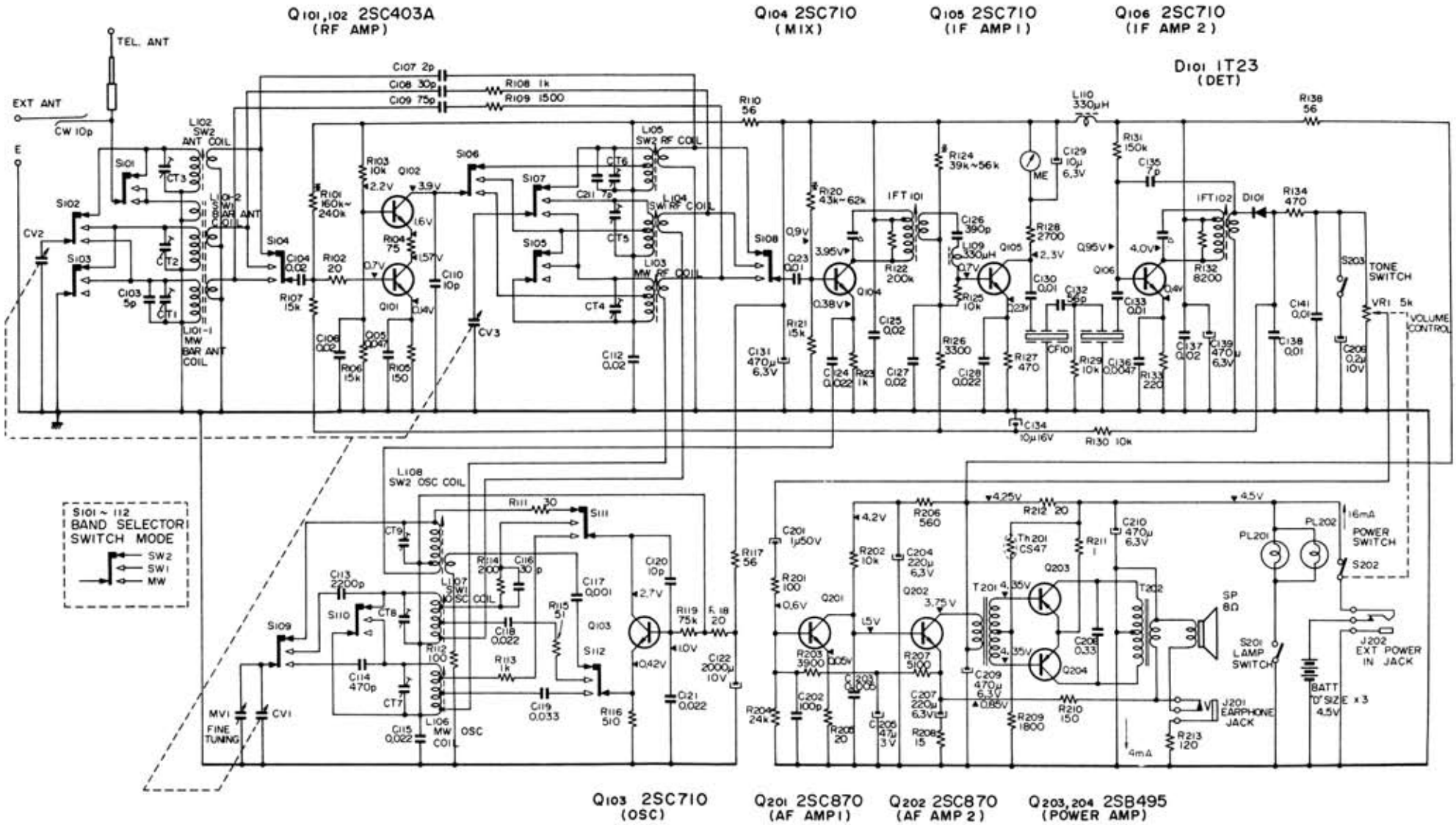

SERVICING GUIDE