SONY TR-719

X_1 2SA122 X_2 2SC76 X_3 2SC76 X_4 2SD65 X_5 2SD66 $X_{6,7}$ 2SB52×2

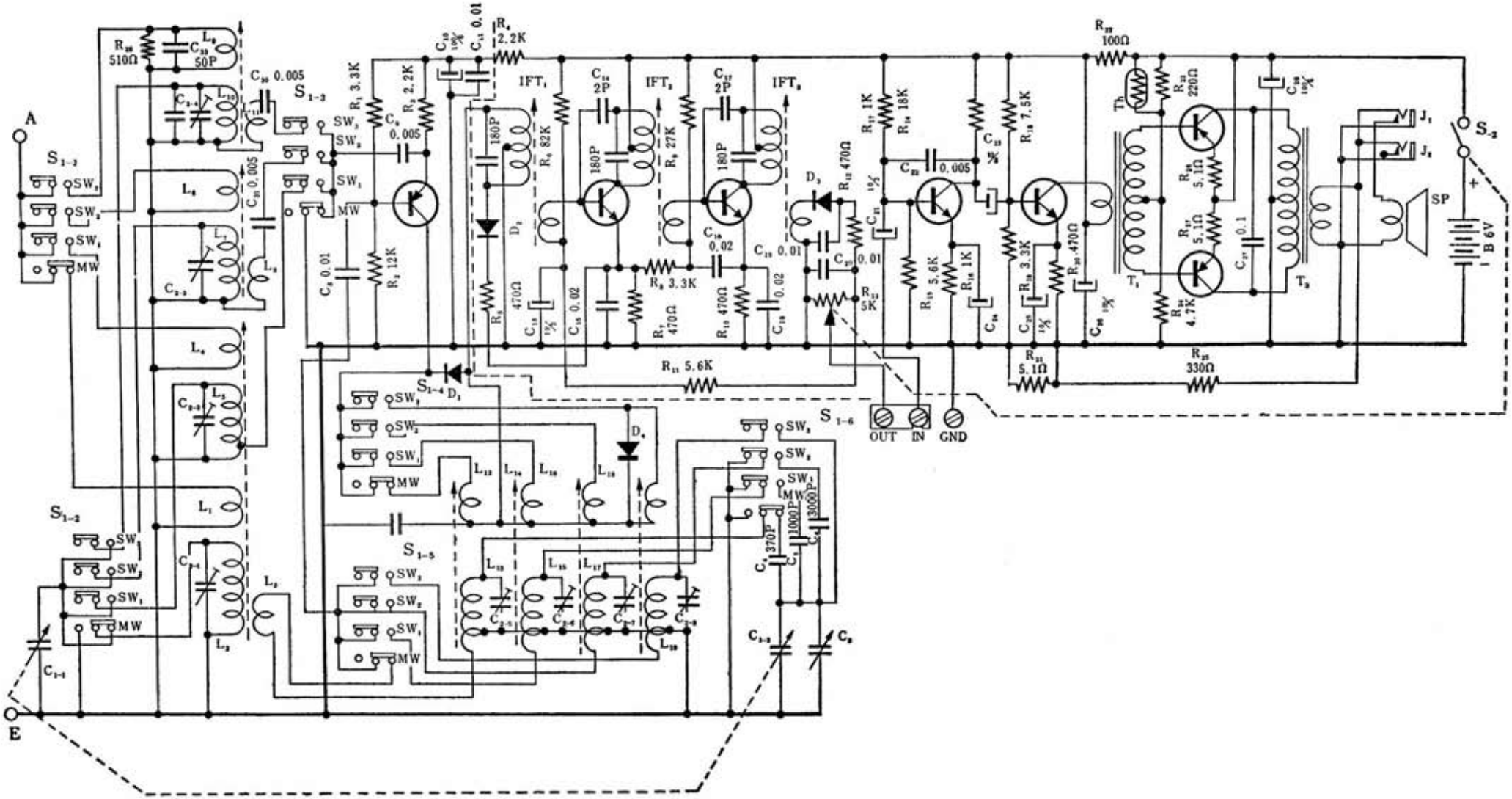

SERVICING GUIDE