ソニー　TR-730

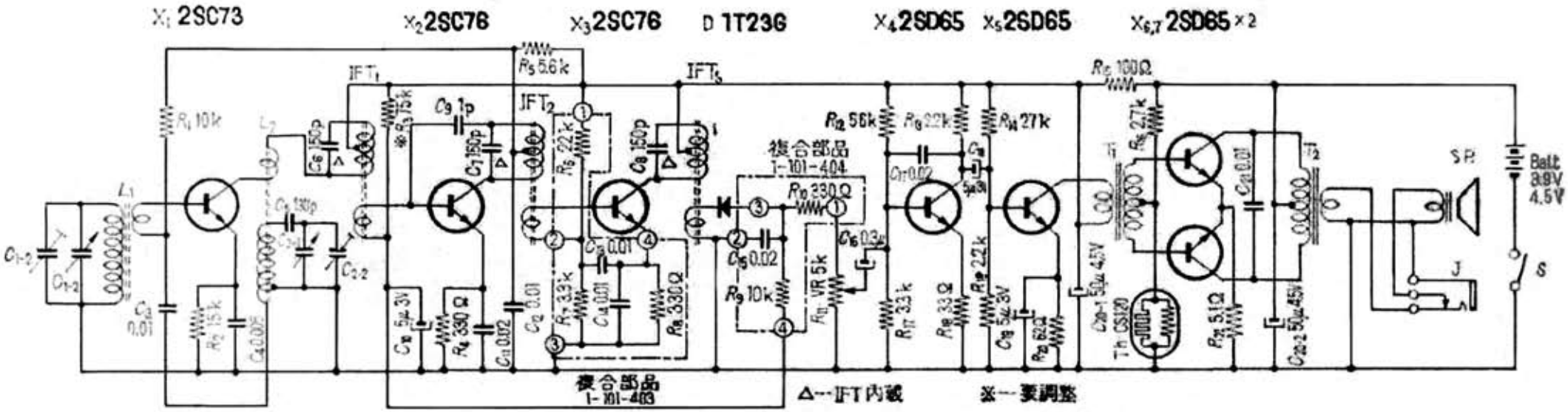
X1 2SC73
X2 2SC76
X3 2SC76
D 1T23G
X4 2SD65
X5 2SD65
X6,7 2SD65×2
複合部品
1-101-404
複合部品
1-101-403
△…IFT内蔵
※…要調整
Batt
3.9V
4.5V
SP
J
S
Th CS120

Schematic Diagram of TR-730

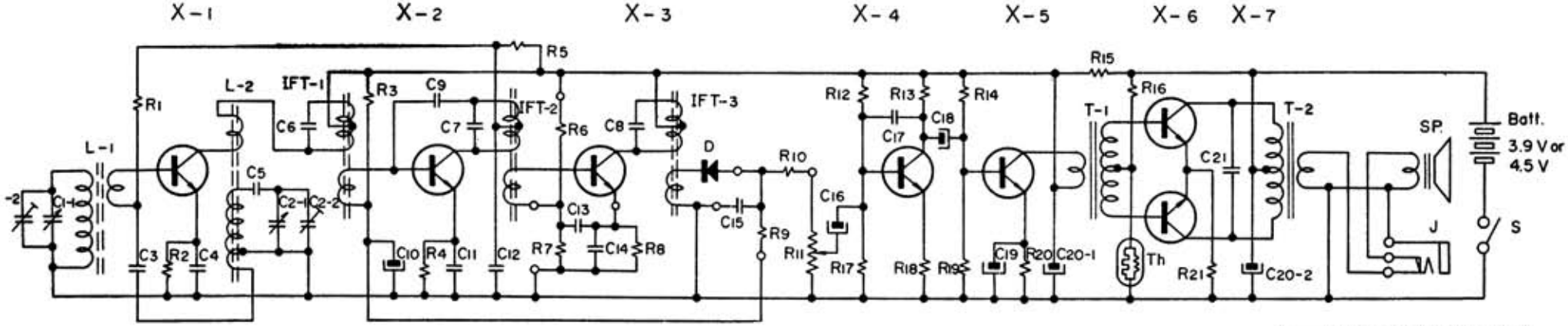

Symbol	Description	Symbol	Description
R_1	Composition Resistor 10 kΩ 1/10 W ± 10%	C^{1-1}_{2-2}	Tuning Capacitor
R_2	15 kΩ 〃	C^{1-2}_{2-2}	Trimmer Capacitor
R_3	75 kΩ 1/10 W ± 5%		
R_4	330 Ω 1/10 W ± 10%	C_3	Capacitor 0.01 μF $^{+80}_{-20}$% Ceramic
R_5	5.6 kΩ 〃	C_4	〃 0.005 μF 〃 〃
R_6	Encapsulated Components 22 kΩ	C_5	〃 130 pF ±50% Styrol
R_7	〃 〃 3.3 kΩ	C_6	〃 150 pF built in IFT_1
R_8	〃 〃 330 kΩ	C_7	〃 150 pF built in IFT_2
R_9	〃 〃 10 kΩ	C_8	〃 150 pF built in IFT_3
R_{10}	〃 〃 330 Ω	C_9	〃 1 pF 0.5 pF Ceramic
R_{11}	Potentiometer 5 kΩ	C_{10}	〃 5 μF $^{+150}_{-0}$% 3 V Electrolytic
R_{12}	Composition Resistor 56 kΩ 1/10 W ± 10%	C_{11}	〃 0.02 μF $^{+80}_{-20}$% Ceramic
R_{13}	2.2 kΩ 〃	C_{12}	〃 0.01 μF $^{+80}_{-20}$% 〃
R_{14}	27 kΩ 〃	C_{13}, C_{14}	0.01 μF (Encapsulated with $R_{6,7,8}$)
R_{15}	Composition Resistor 100 Ω 1/10 W ± 10%	C_{15}	0.01 μF (Encapsulated with $R_{9,10}$)
R_{16}	〃 2.7 kΩ 〃	C_{16}	Capacitor 0.3 μF $^{+100}_{-20}$% 6 V Alox
R_{17}	〃 3.3 kΩ 〃	C_{17}	0.02 μF $^{+100}_{-20}$% Ceramic
R_{18}	〃 33 Ω 〃	C_{18}	5 μF $^{+150}_{-0}$% 3 V Electrolytic
R_{19}	〃 2.2 kΩ 〃	C_{19}	5 μF $^{+150}_{-0}$% 〃
R_{20}	〃 62 Ω 〃	C_{20}	50μF×2 $^{+150}_{-0}$% 4.5V Electrolytic Block
R_{21}	〃 5.1 Ω 〃	C_{21}	0.01 μF $^{+80}_{-20}$% Ceramic