SONY TR-838

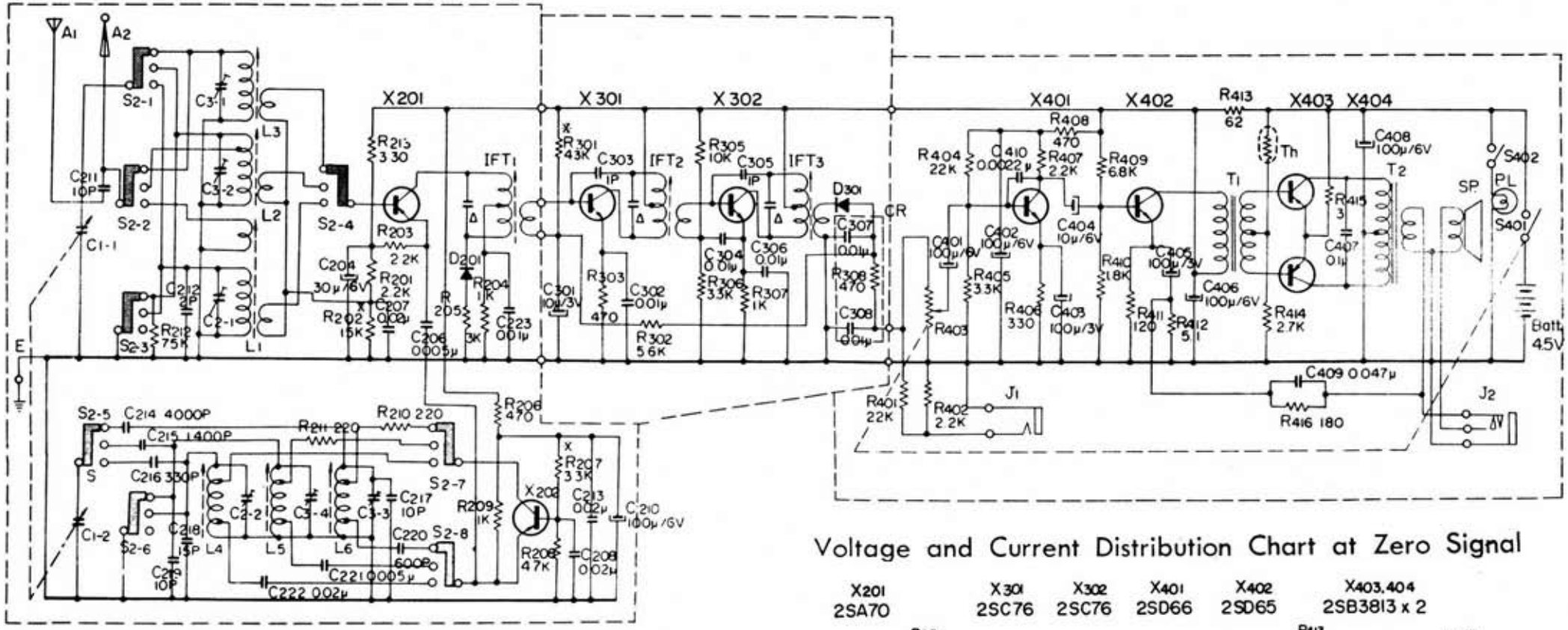

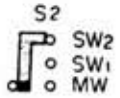

⁂ To be adjusted

Capacitors marked with "Δ" are built in relative IFTs
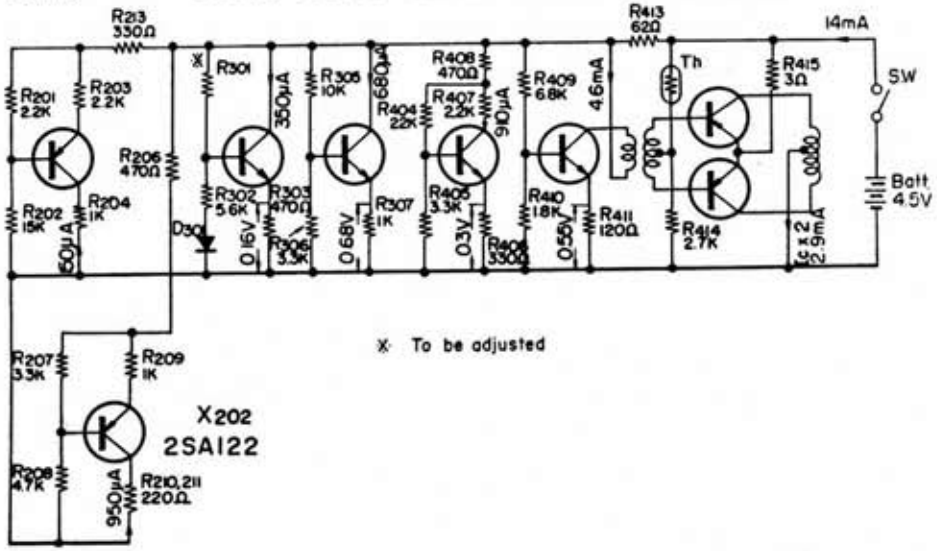
Voltage and Current Distribution Chart at Zero Signal