SONY 3F-85W

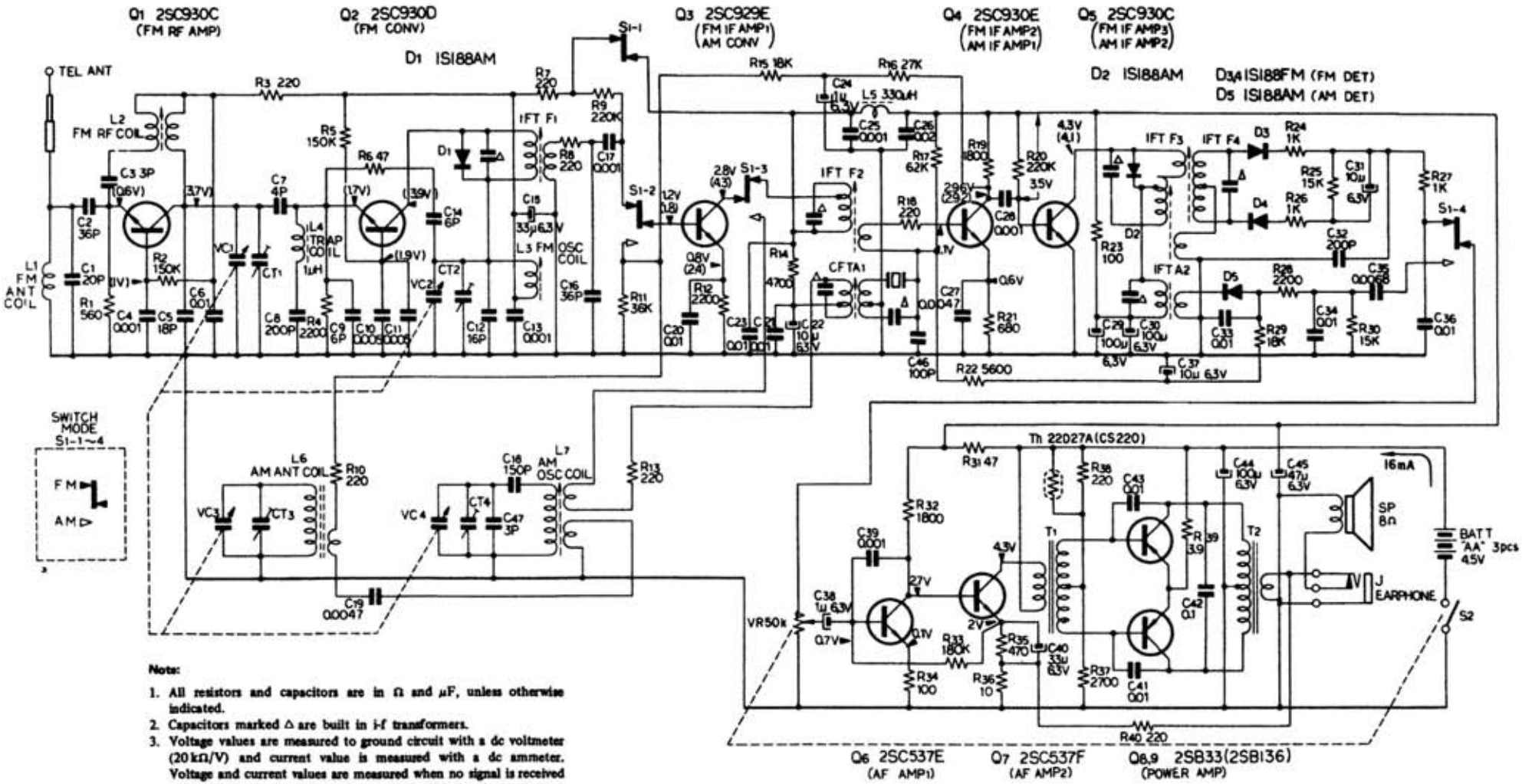

Note:

1. All resistors and capacitors are in Ω and μF, unless otherwise indicated.
2. Capacitors marked Δ are built in i-f transformers.
3. Voltage values are measured to ground circuit with a dc voltmeter (20 kΩ/V) and current value is measured with a dc ammeter. Voltage and current values are measured when no signal is received and voltage values in ( ) are taken with band selector set to FM.
   Variations may be noted due to normal production tolerances.
4. When replacing transistors Q8 and Q9, use 2SB136.
5. When replacing thermistor Th, use CS220 and remove R38 (220Ω).

Service Guide