SONY 3R-67

Q1 2SC403A Q2 2SC403A Q3 2SC403A Q4 2SC403A Q5 2SC633 Q6 2SC633 Q7,8 2SB136

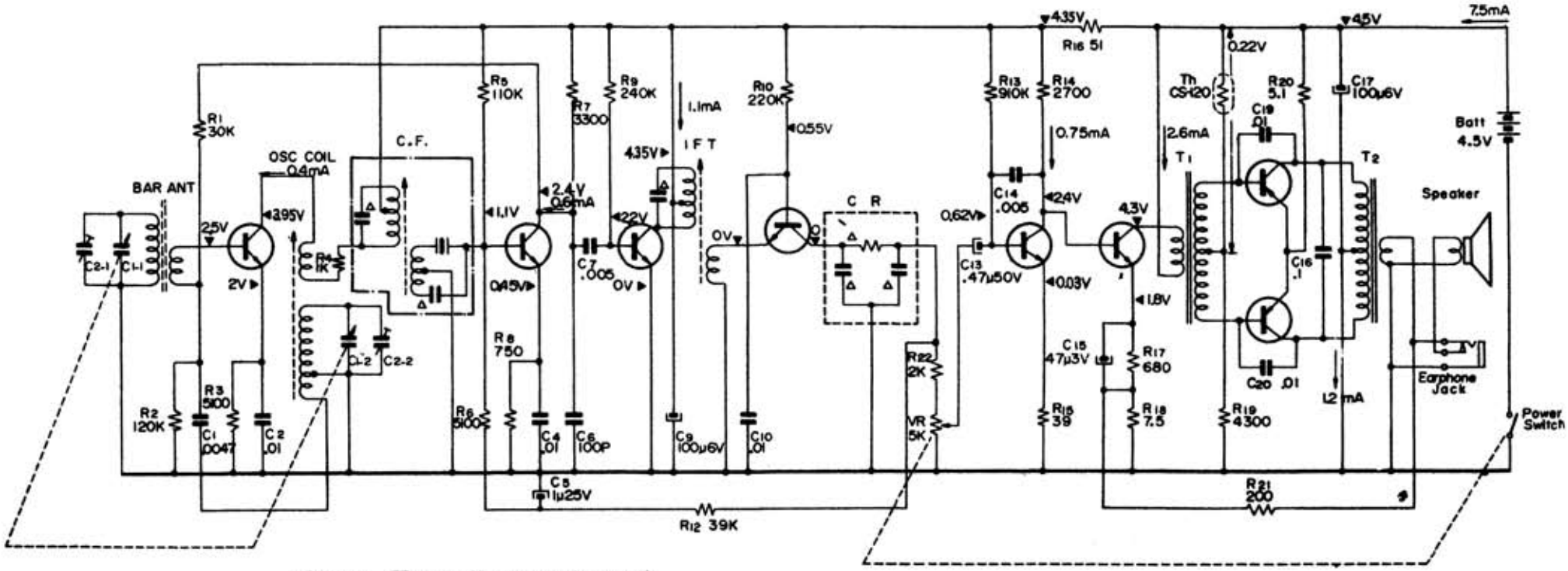

△ Built in IFT, or CR (Encapsulated Component)