STANDARD SR-G104

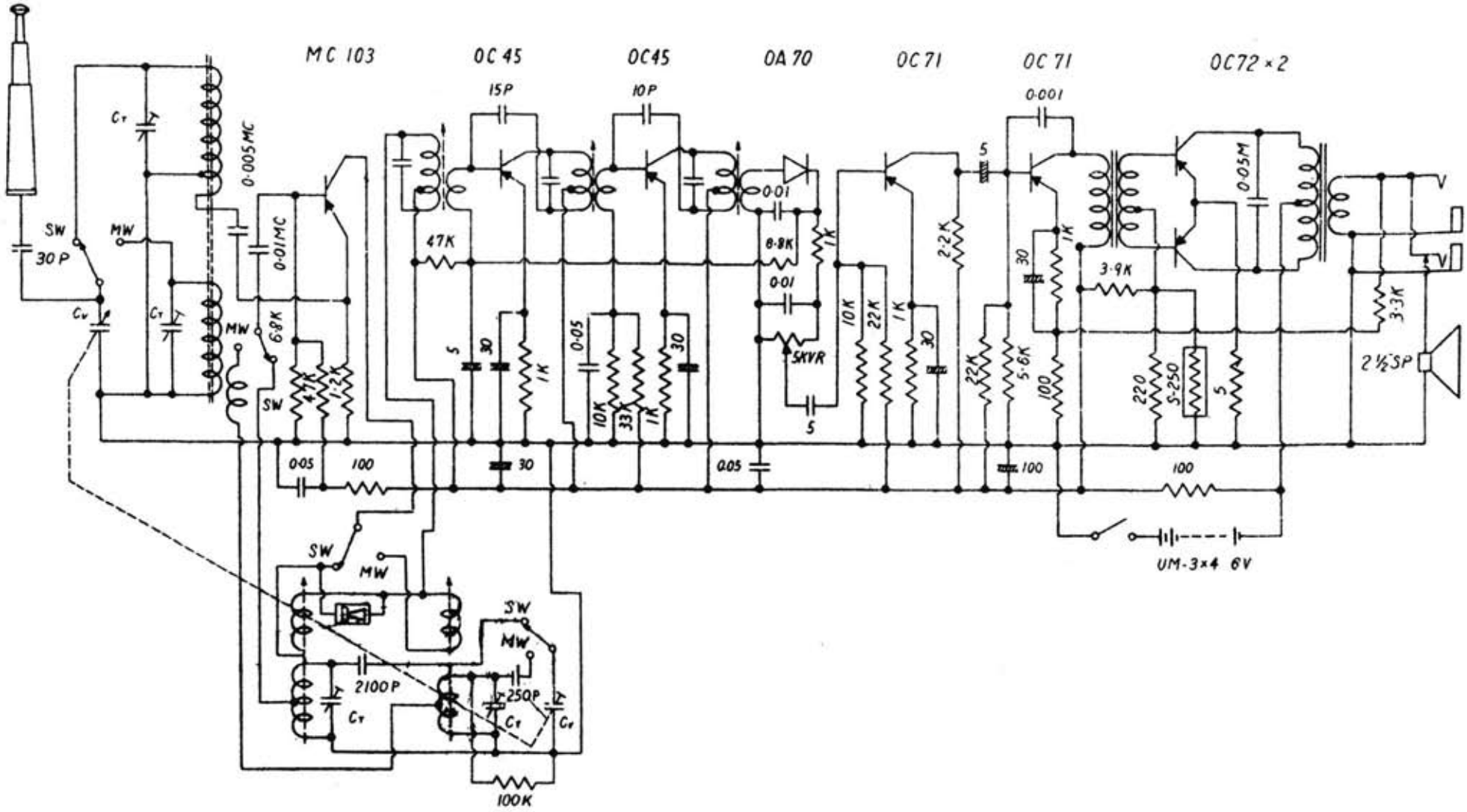

STANDARD SERVICE DATA