STANDARD SR-H105

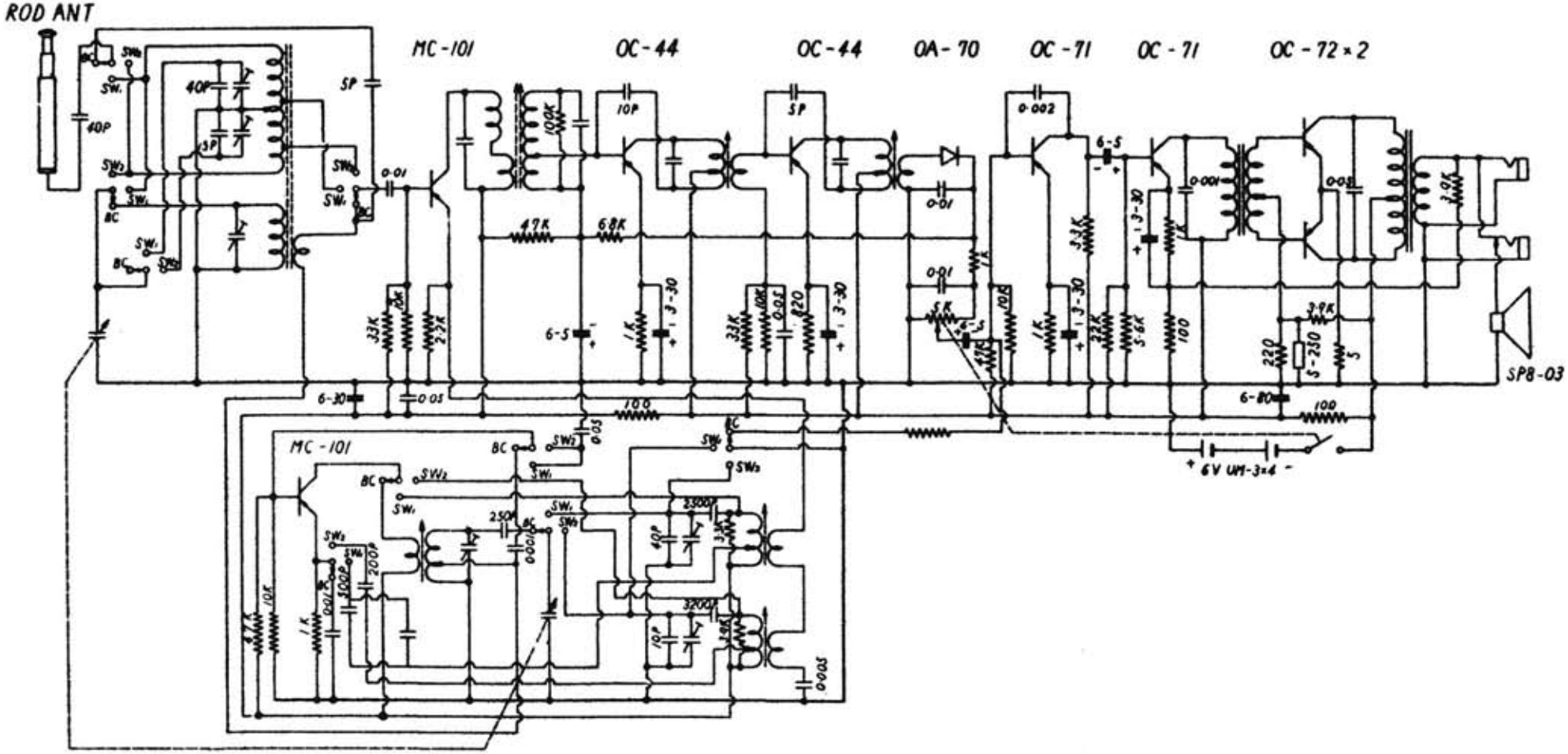

STANDARD SERVICE DATA