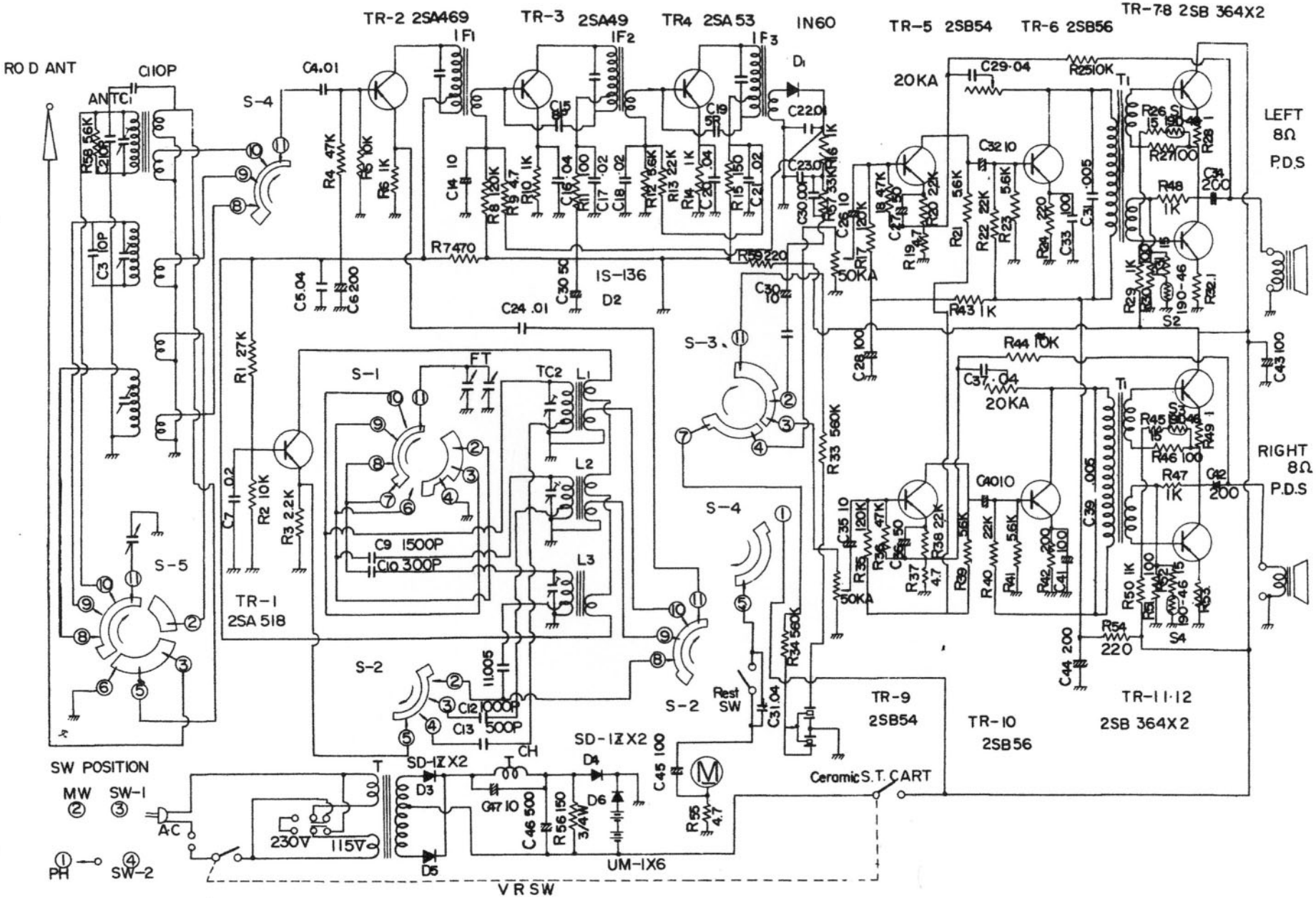Toshiba GP-33R