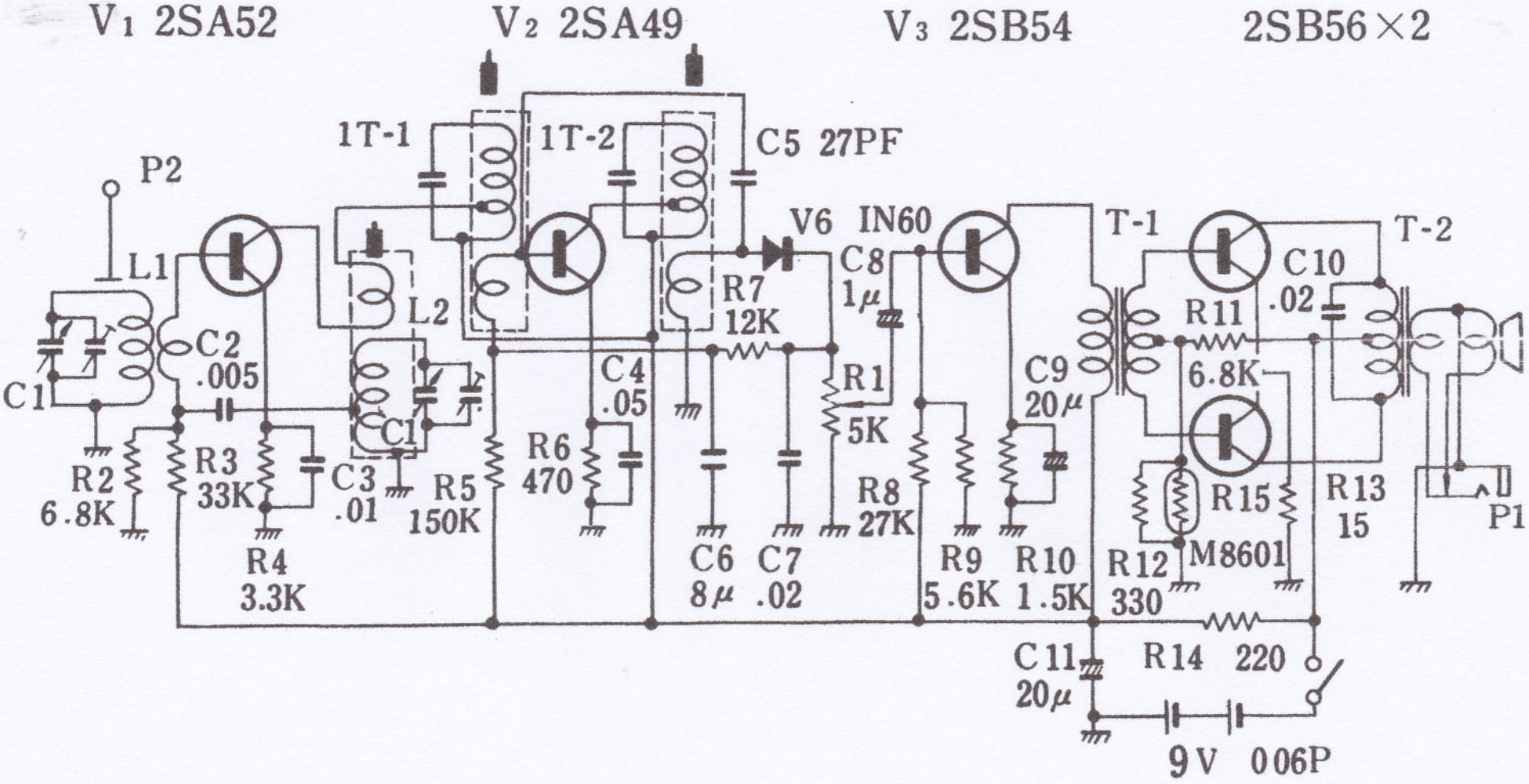
V1 2SA52
V2 2SA49
V3 2SB54
2SB56×2
P2
1T-1
1T-2
C5 27PF
V6 IN60
T-1
T-2
L1
L2
C1
C2
.005
C3
.01
C4
.05
C8
1μ
R7
12K
R1
5K
C9
20μ
C10
.02
R11
6.8K
R2
6.8K
R3
33K
R4
3.3K
R5
150K
R6
470
C6
8μ
C7
.02
R8
27K
R9
5.6K
R10
1.5K
R12
330
R13
15
R14 220
R15
M8601
C11
20μ
9V 006P
P1