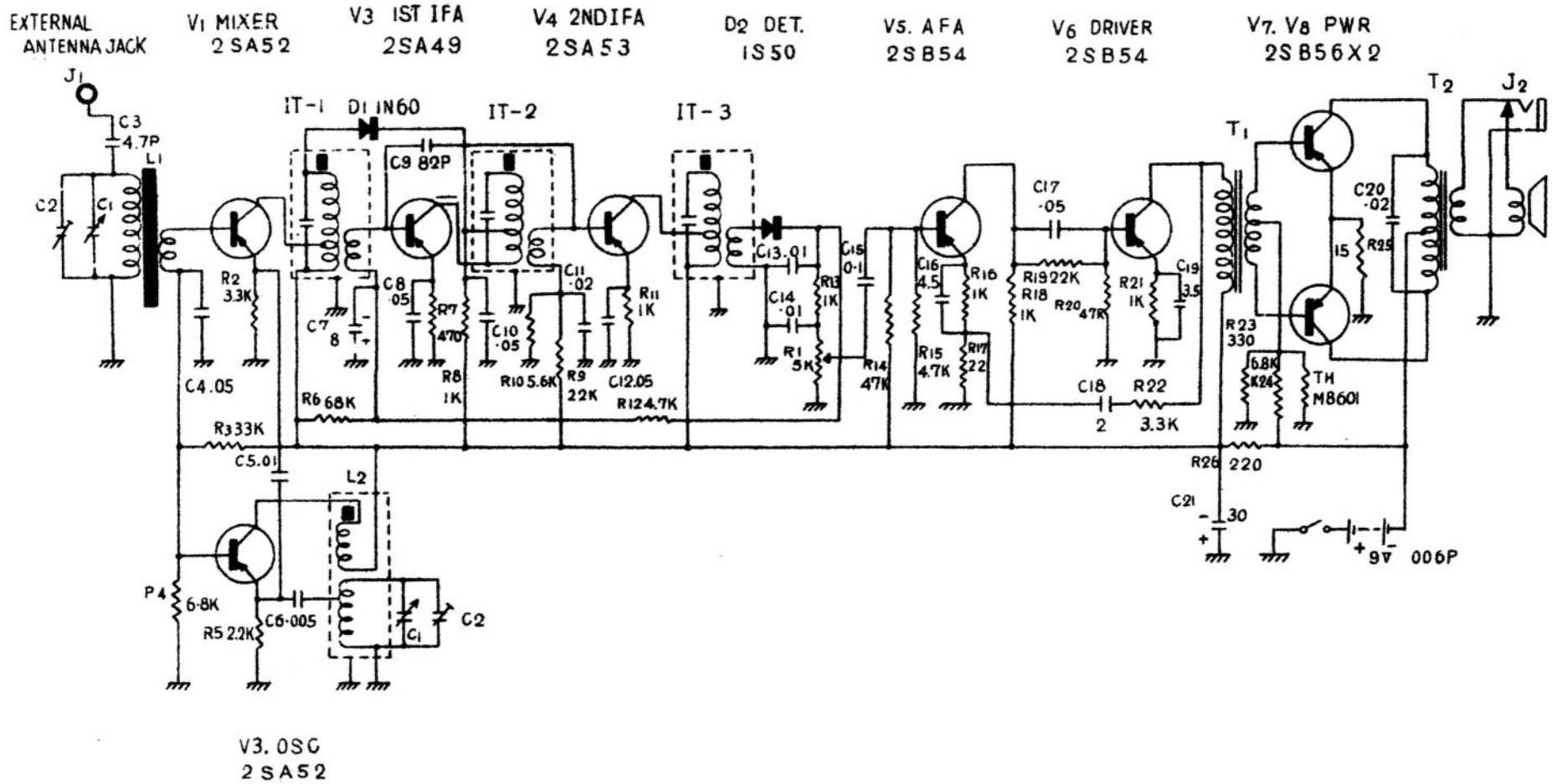Toshiba 8TP-90