6FB－180 接続図

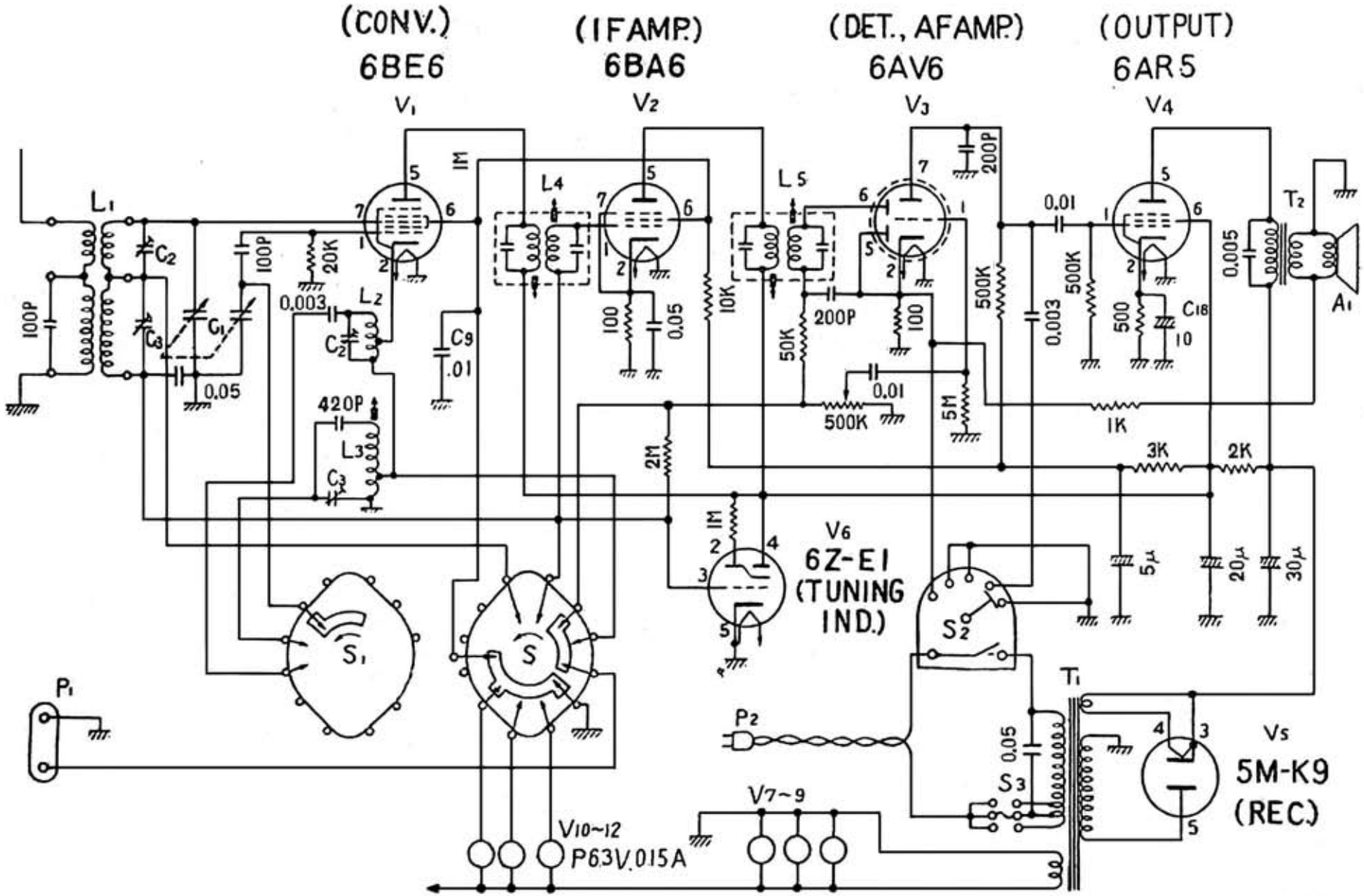

Edit by JA3GZP