めじろFS 6RD-262

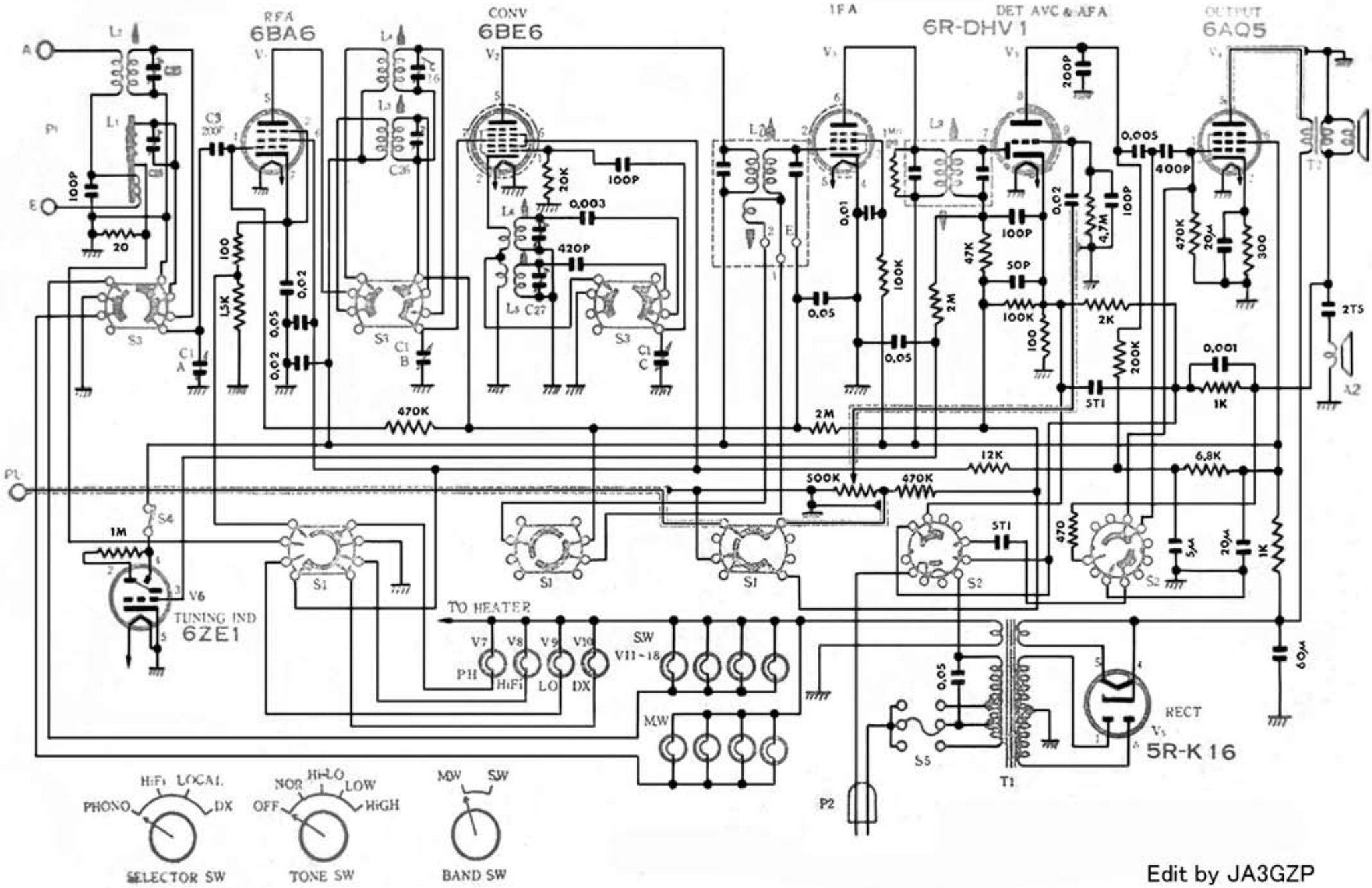

Edit by JA3GZP