MODEL 6SC-35

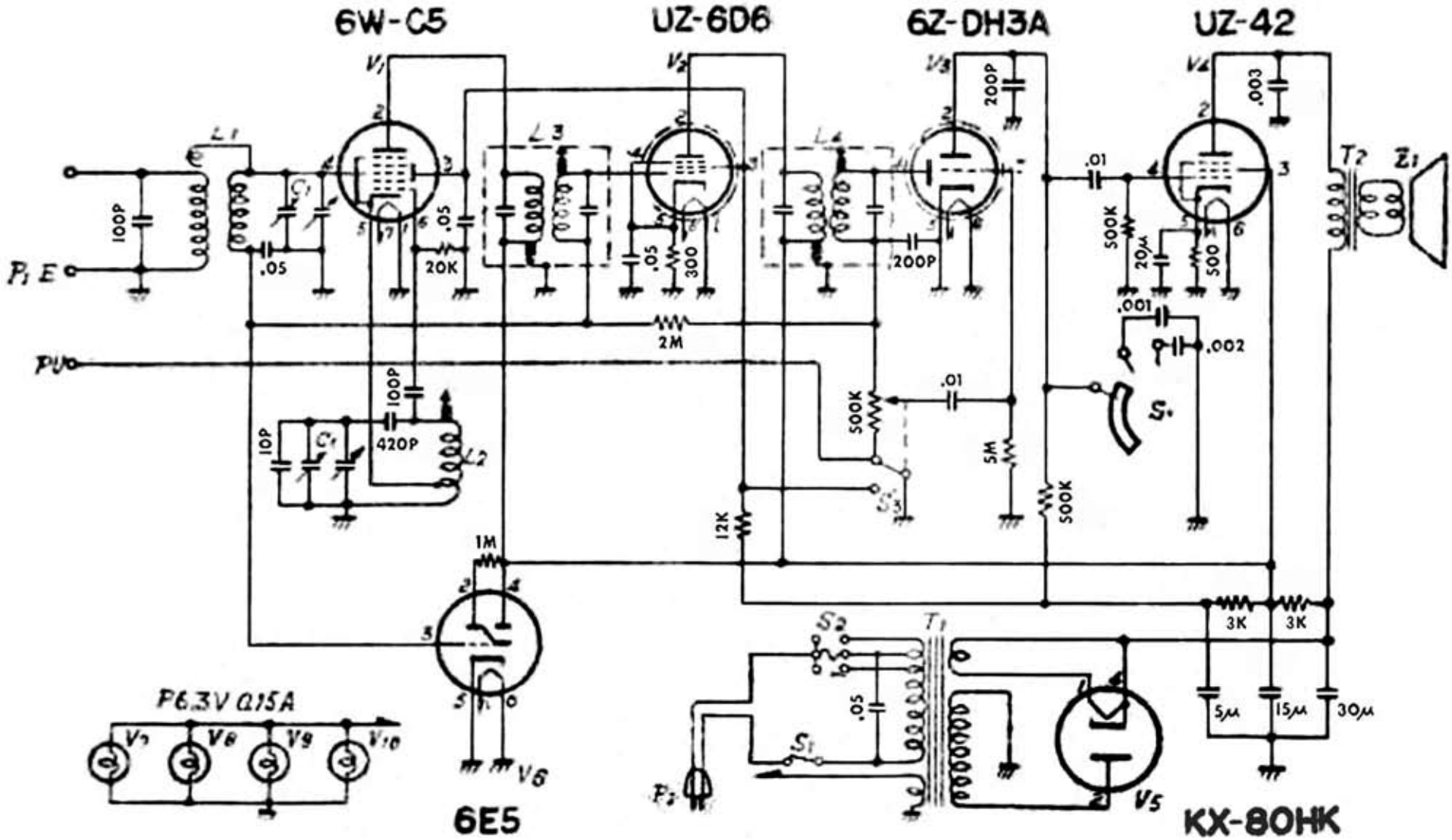

Edit by JA3GZP