かなりやAS 5UL-328

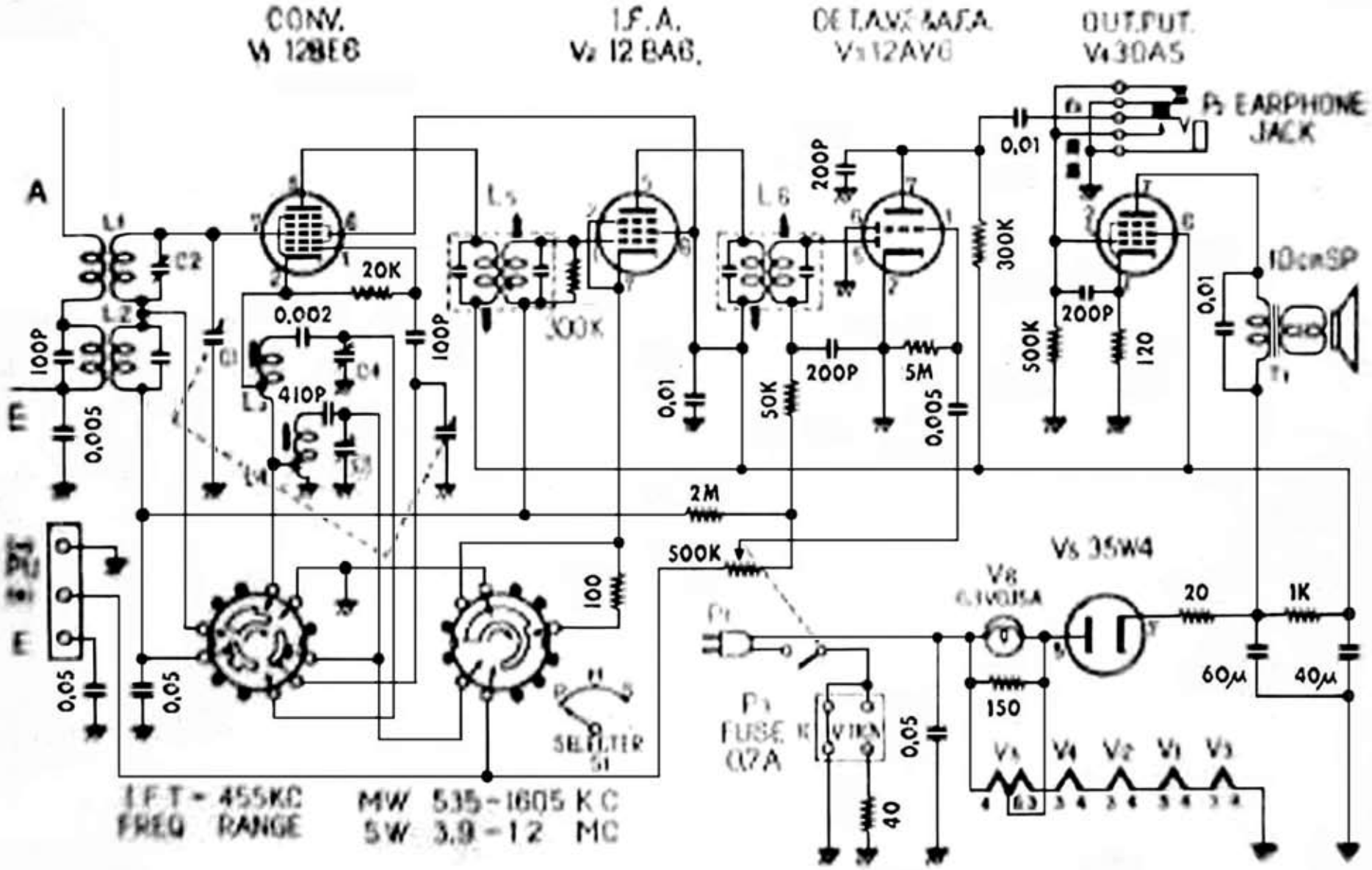

Edit by JA3GZP