Toshiba かなりやV MODEL 5UL-607

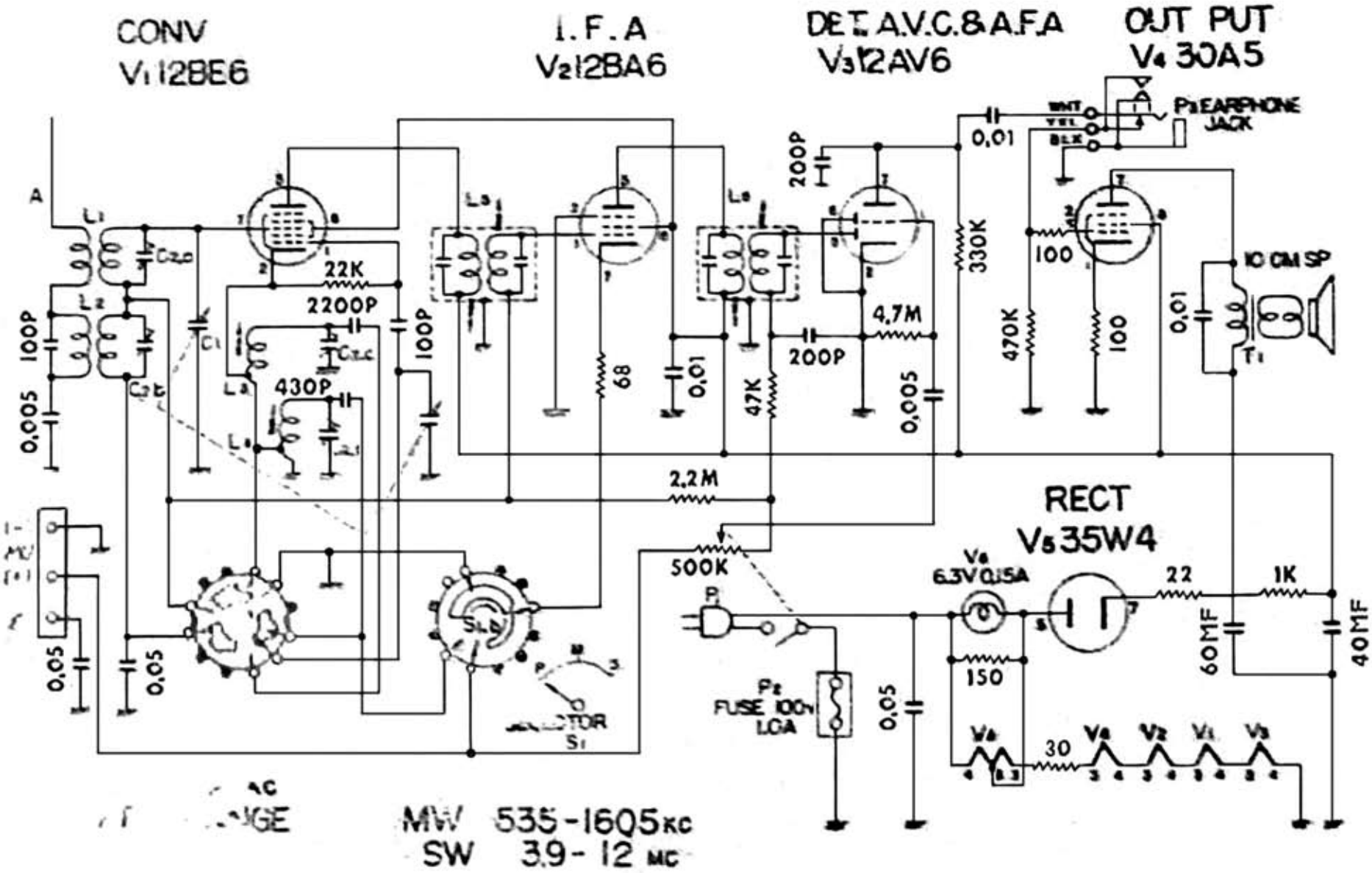

Edit by JA3GZP