6ZB-240　配線図

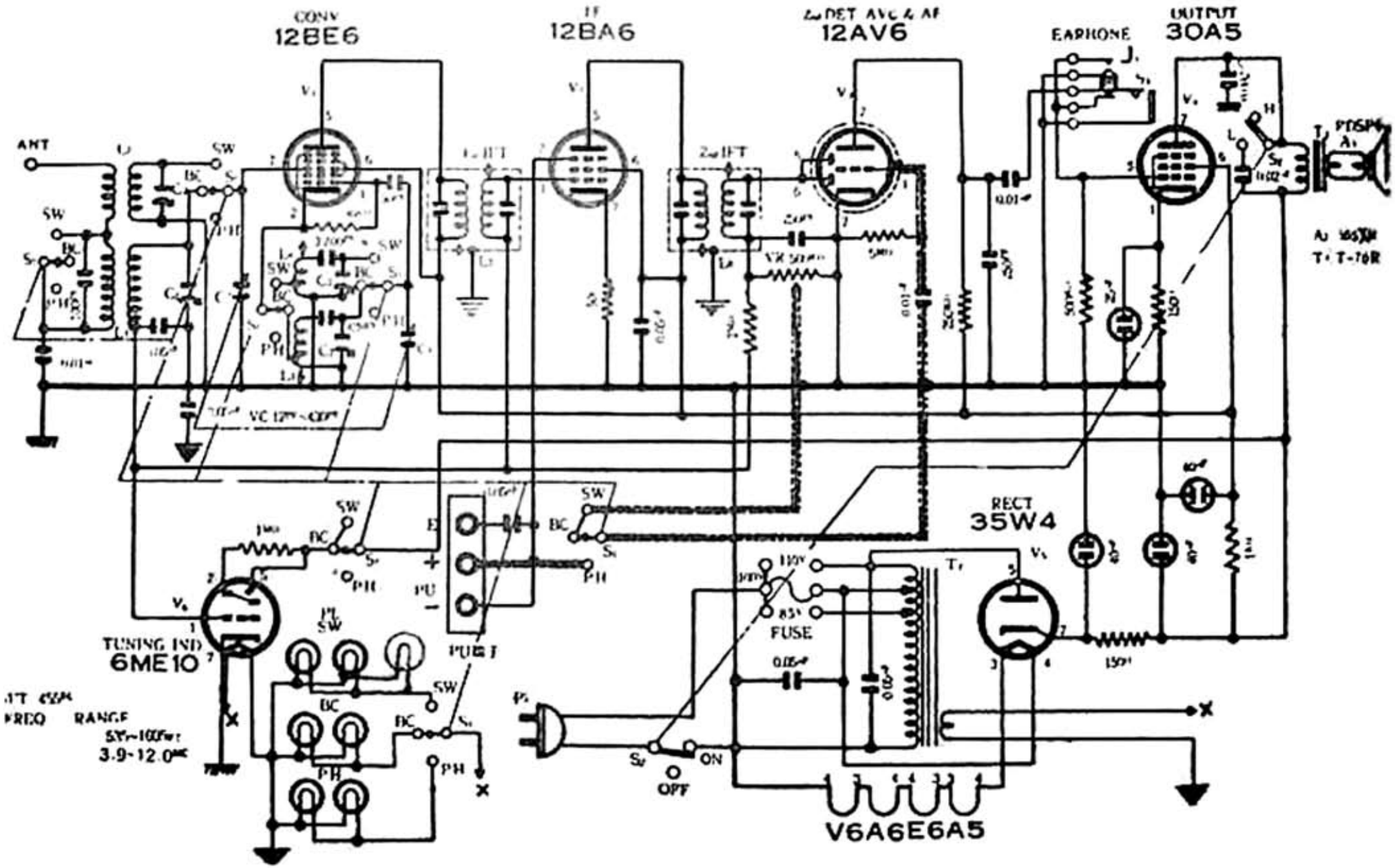
CONV
12BE6
IF
12BA6
DET AVC & AF
12AV6
EARPHONE
OUTPUT
30A5
ANT
SW
BC
PH
TUNING IND
6ME10
PU
FUSE
RECT
35W4
ON
OFF
V6A6E6A5
FREQ RANGE
3.9-12.0MC