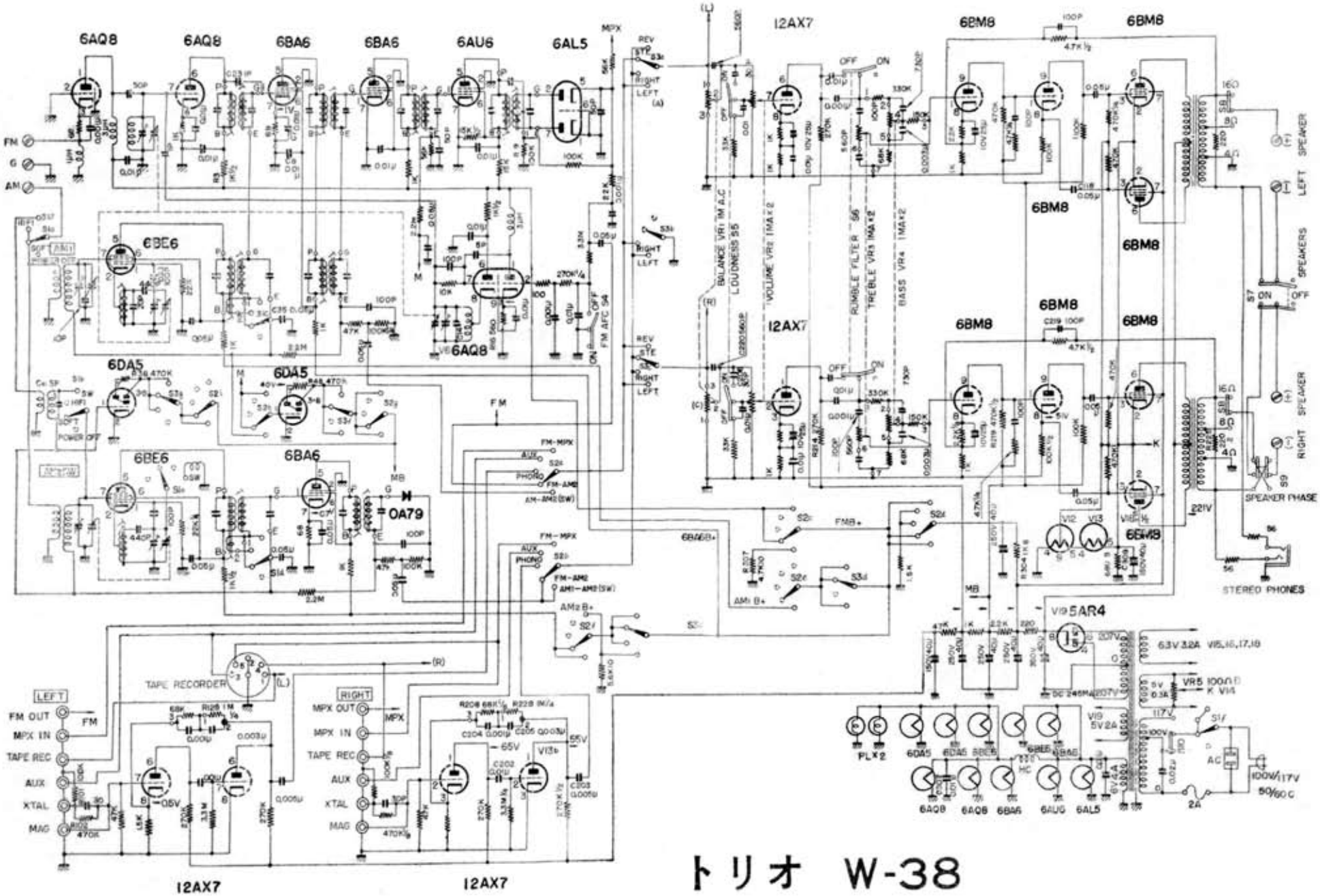

トリオ W-38

電波科学　昭和３６年（1961）５月号

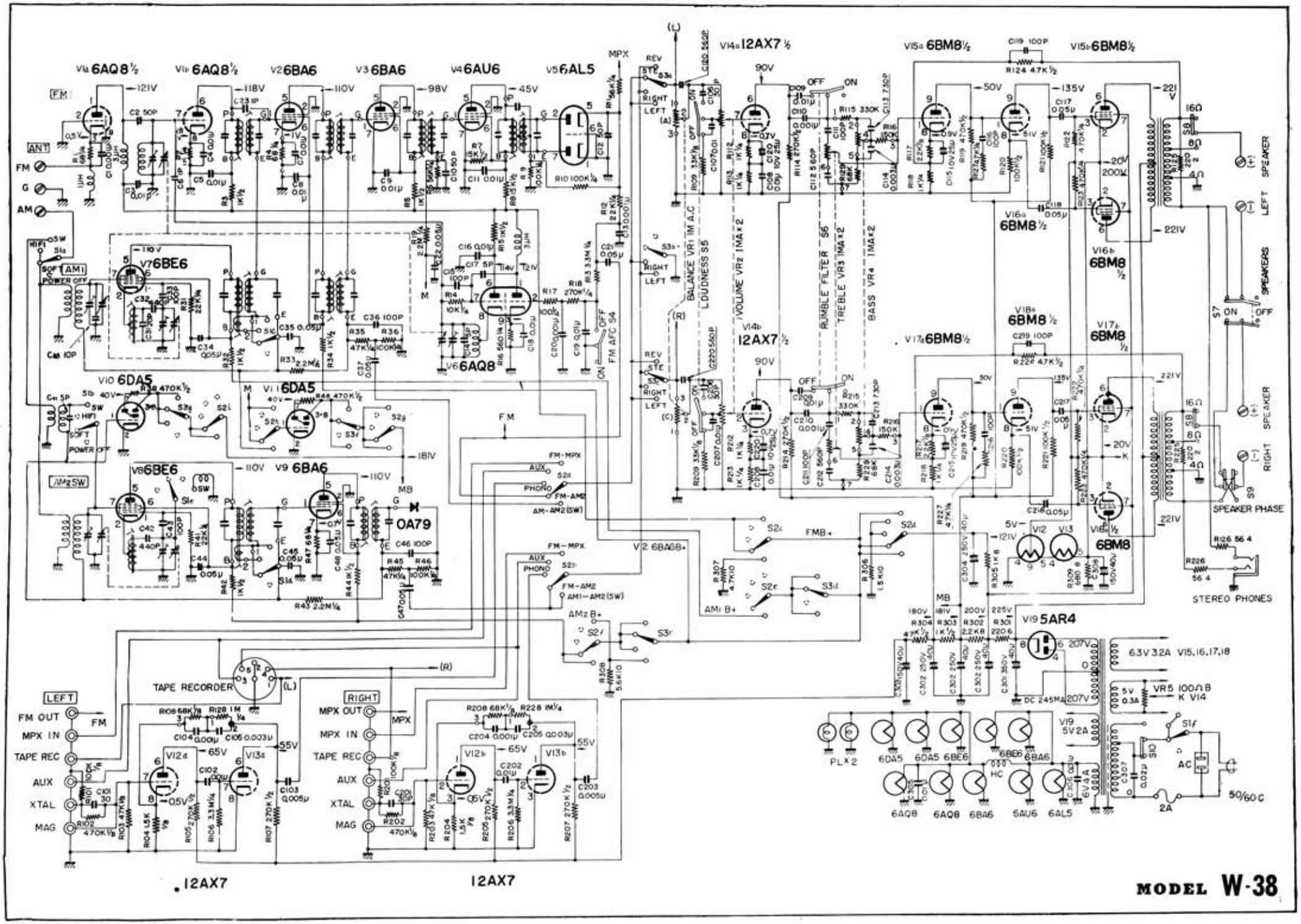
V1a 6AQ8½
V1b 6AQ8½
V2 6BA6
V3 6BA6
V4 6AU6
V5 6AL5
V14a 12AX7½
V14b 12AX7½
V15a 6BM8½
V15b 6BM8½
V16a 6BM8½
V16b 6BM8½
V17a 6BM8½
V17b 6BM8½
V18a 6BM8½
V18b 6BM8½
V7 6BE6
V6 6AQ8
V10 6DA5
V11 6DA5
V8 6BE6
V9 6BA6
V12 6BA6
V19 5AR4
OA79
FM
ANT
AM
MPX
LEFT SPEAKER
RIGHT SPEAKER
SPEAKERS
SPEAKER PHASE
STEREO PHONES
BALANCE VR1 1M A.C
LOUDNESS S5
VOLUME VR2 1MAX2
RUMBLE FILTER S6
TREBLE VR3 1MAX2
BASS VR4 1MAX2
FM AFC S4
TAPE RECORDER
LEFT
RIGHT
FM OUT
MPX IN
TAPE REC
AUX
XTAL
MAG
6.3V 3.2A V15,16,17,18
PLX2
6DA5
6BE6
6BA6
6AQ8
6AU6
6AL5
6V4A
AC
50/60C
12AX7
12AX7

MODEL W-38