TRIO MODEL 5M-24

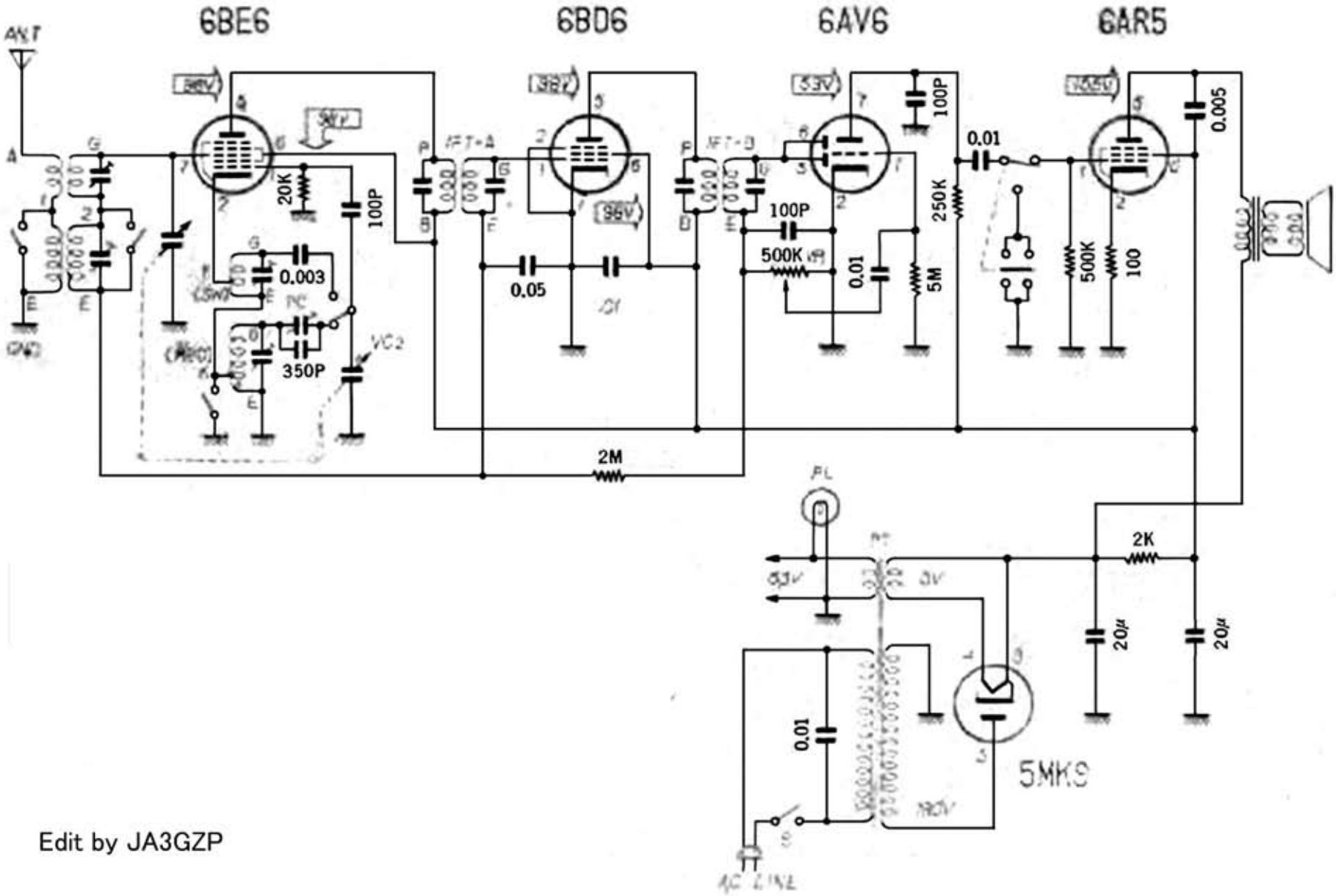

Edit by JA3GZP