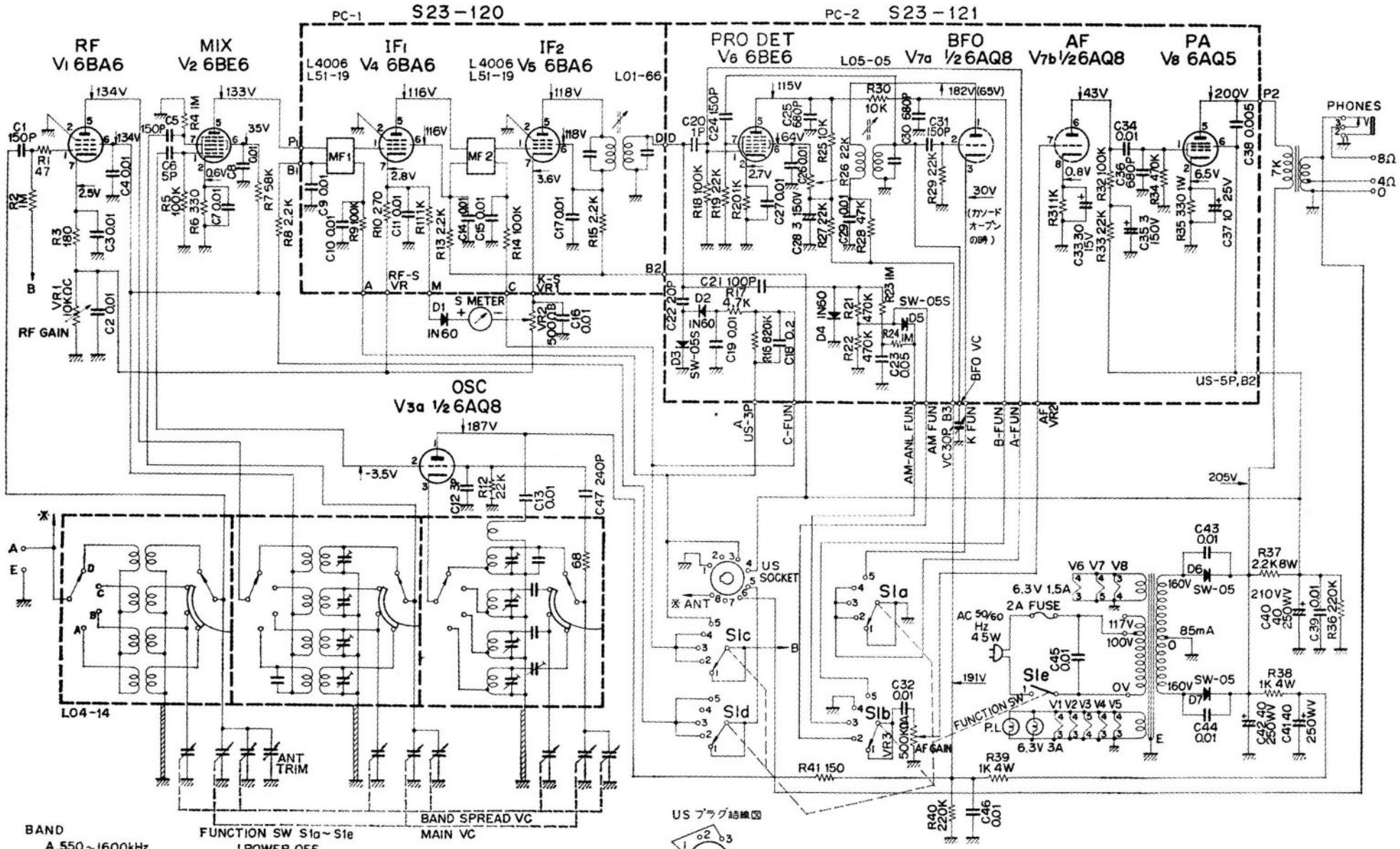
PC-1 S23-120
PC-2 S23-121
RF V1 6BA6
MIX V2 6BE6
IF1 V4 6BA6
IF2 V5 6BA6
PRO DET V6 6BE6
BFO V7a 1/2 6AQ8
AF V7b 1/2 6AQ8
PA V8 6AQ5
OSC V3a 1/2 6AQ8
L4006 L51-19
L01-66
L05-05
L04-14
RF GAIN
S METER
SW-05S
BFO VC
US-5P,B2
PHONES
US SOCKET
ANT TRIM
BAND SPREAD VC
MAIN VC
FUNCTION SW
AF GAIN
US プラグ結線図
BAND
A. 550~1600kHz
B. 1.6~4.8MHz
C. 4.8~14.5MHz
D. 10.5~30MHz
FUNCTION SW S1a~S1e
1. POWER OFF
2. AM
3. AM ANL
4. SEND
5. SSB-CW

9R-59D

＊“トリオ„　9R-59D　通信型受信機

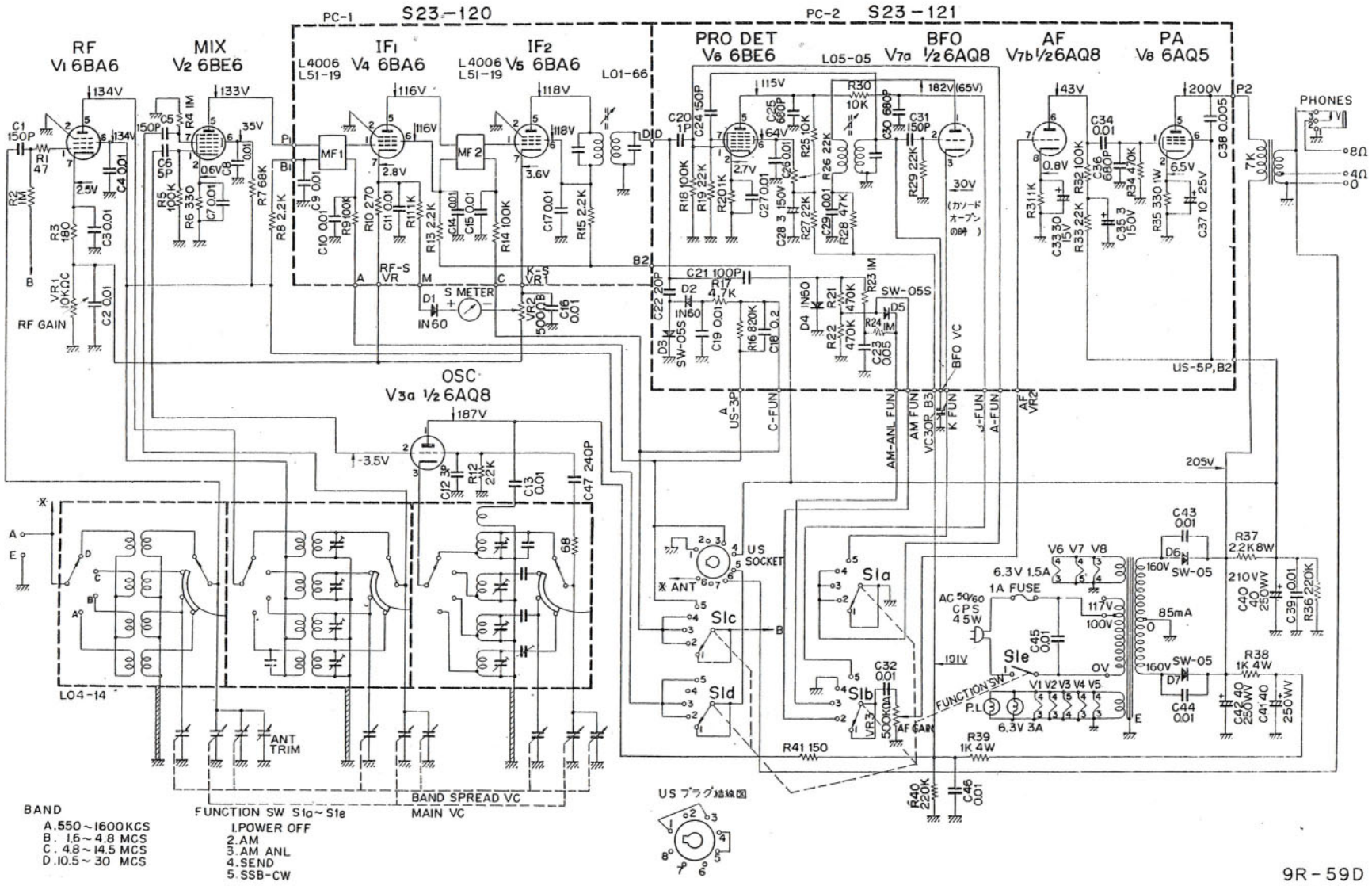

電波技術　昭和４３年（1968）５月号