VICTOR STEREO Hi-Fi AUDIOLA

BR-200 配線図

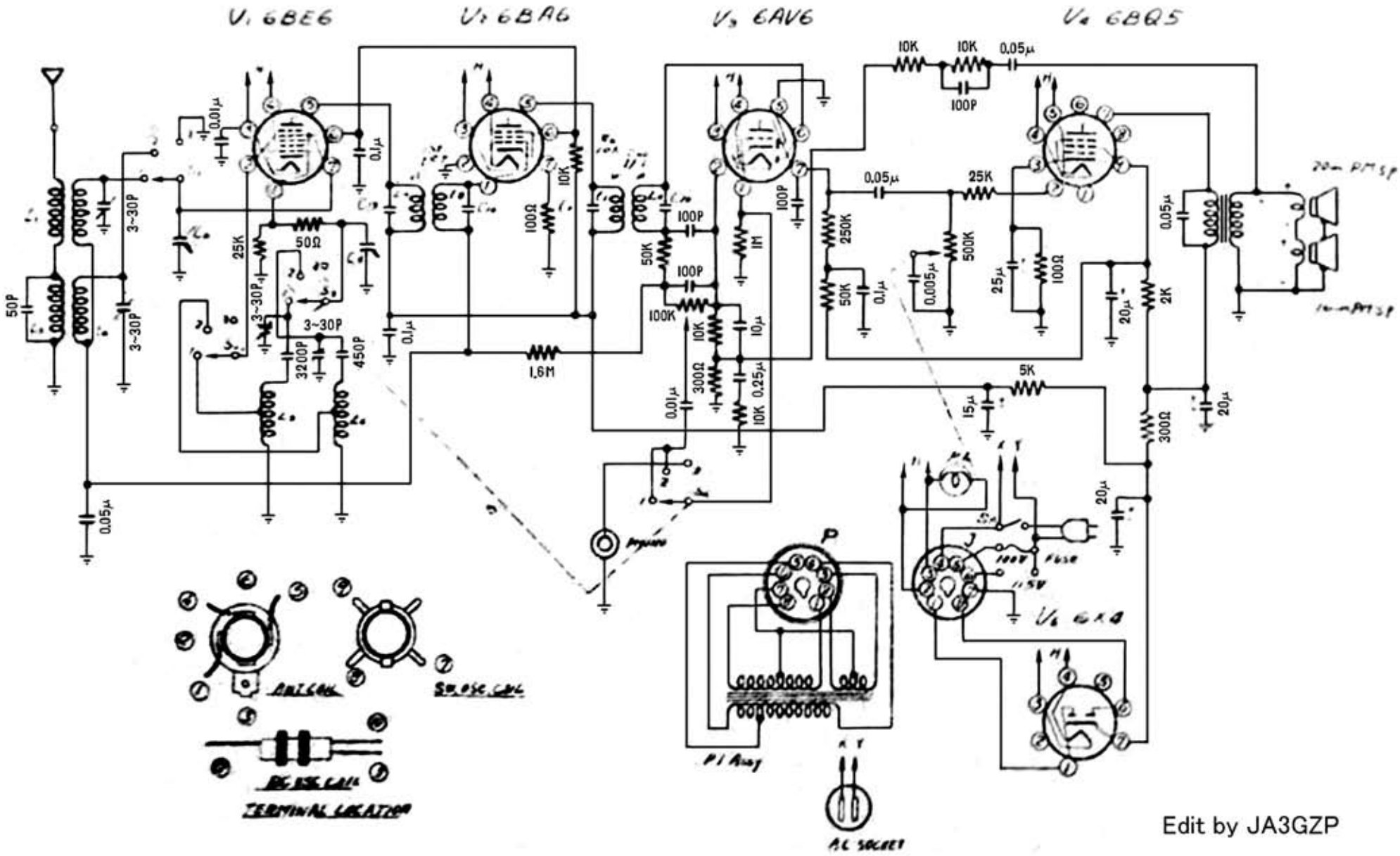

Edit by JA3GZP