VICTOR RADIO MODEL F-15

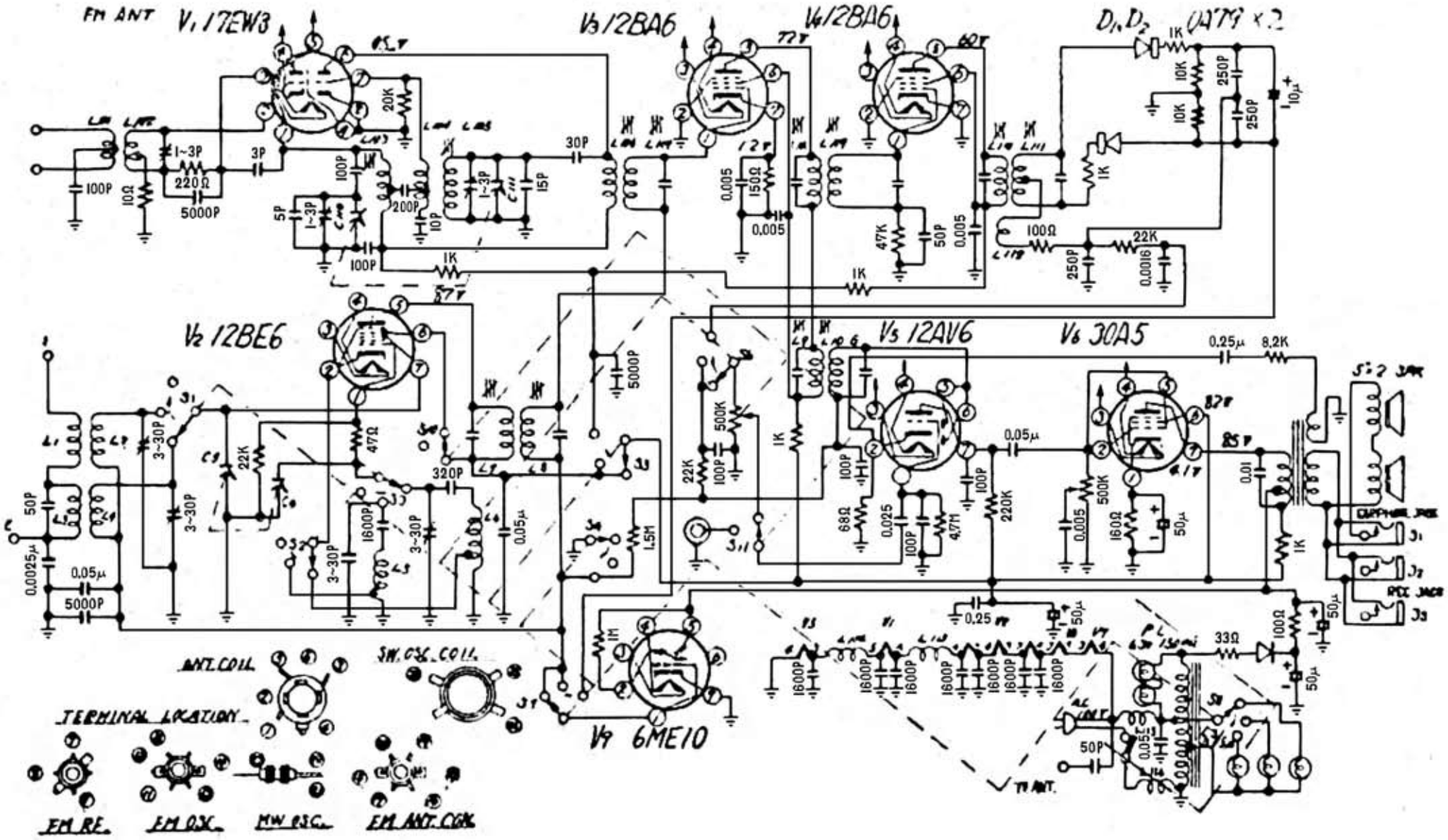

Edit by JA3GZP