ビクター　MLA-12

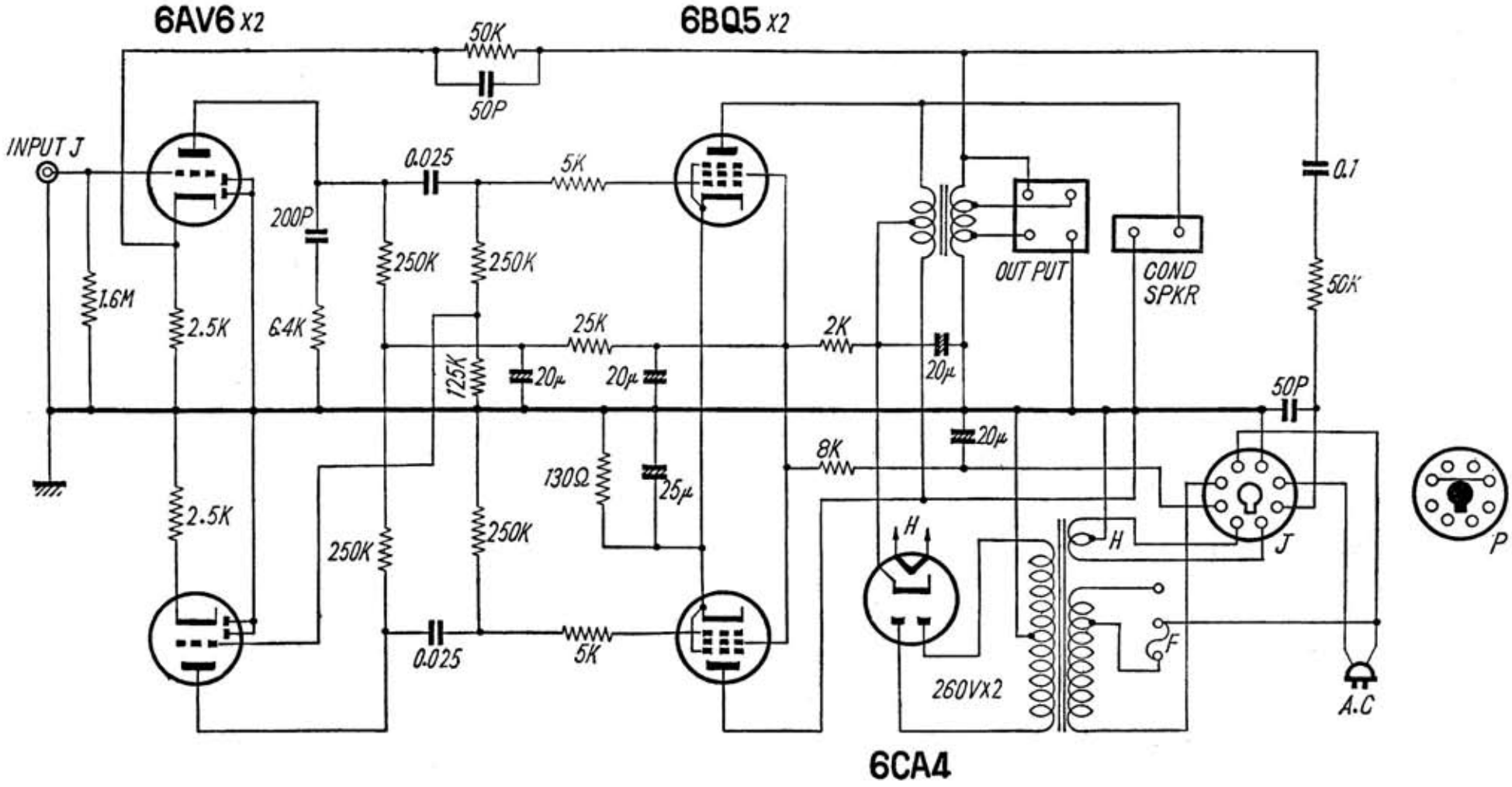
6AV6 X2
6BQ5 X2
6CA4
INPUT J
50K
50P
0.025
5K
200P
250K
250K
1.6M
2.5K
6.4K
25K
2K
125K
20μ
20μ
20μ
OUT PUT
COND SPKR
0.1
50K
50P
20μ
8K
130Ω
25μ
2.5K
250K
250K
H
H
J
P
F
0.025
5K
260VX2
A.C