ビクター　PLA-6

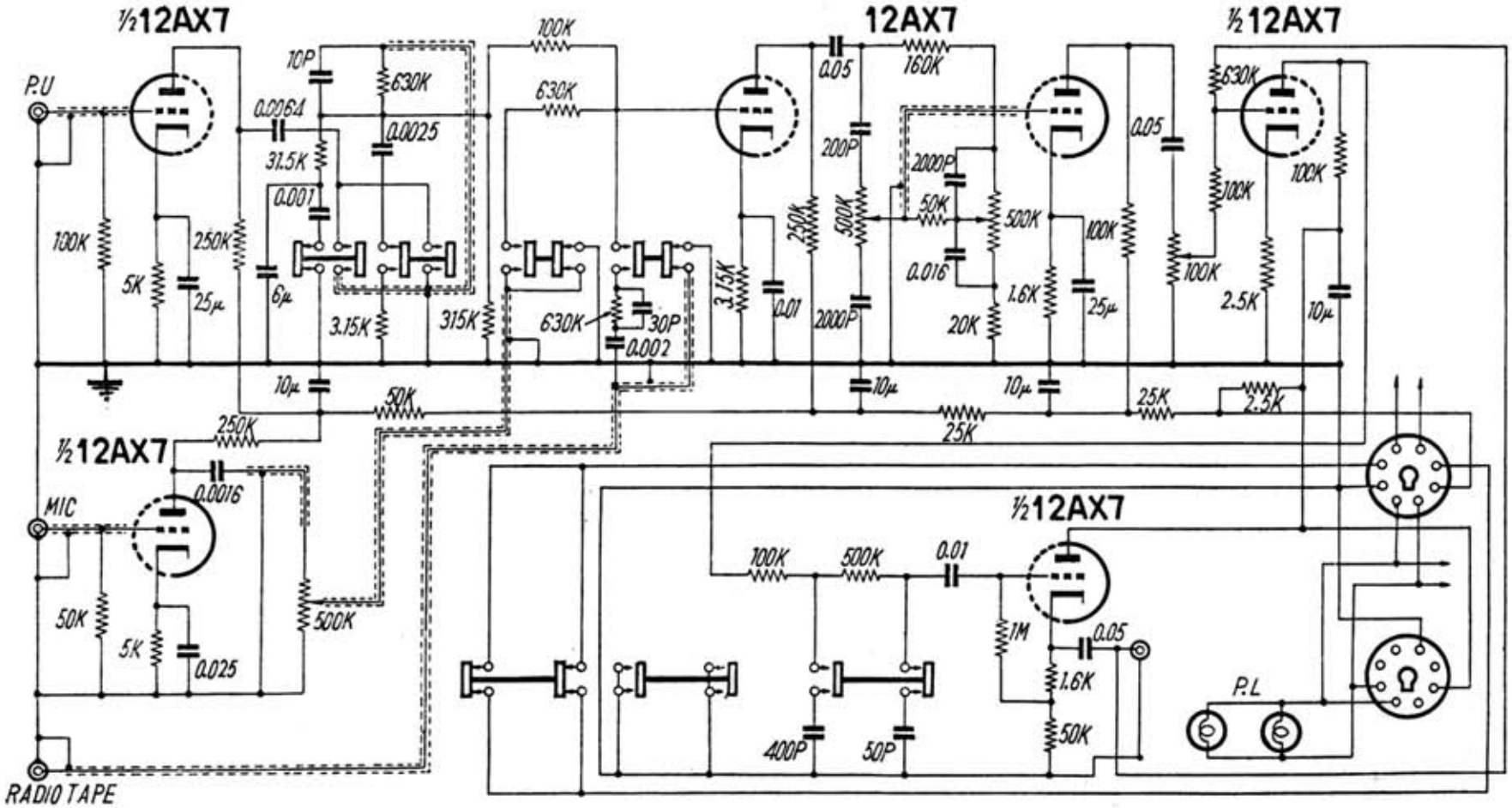
½12AX7
12AX7
½12AX7
½12AX7
½12AX7
P.U
MIC
RADIO TAPE
P.L
10P
0.0064
31.5K
0.001
630K
0.0025
100K
630K
0.05
160K
200P
2000P
50K
500K
0.016
1.6K
20K
25μ
2.5K
10μ
25K
250K
5K
6μ
3.15K
315K
30P
0.002
3.15K
0.01
0.0016
0.025
1M
400P
50P

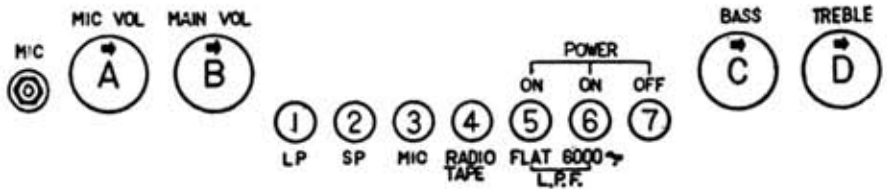
MIC
MIC VOL
A
MAIN VOL
B
POWER
ON
ON
OFF
BASS
C
TREBLE
D
1
2
3
4
5
6
7
LP
SP
MIC
RADIO TAPE
FLAT
6000~
L.P.F.