NIVICO 10A-3

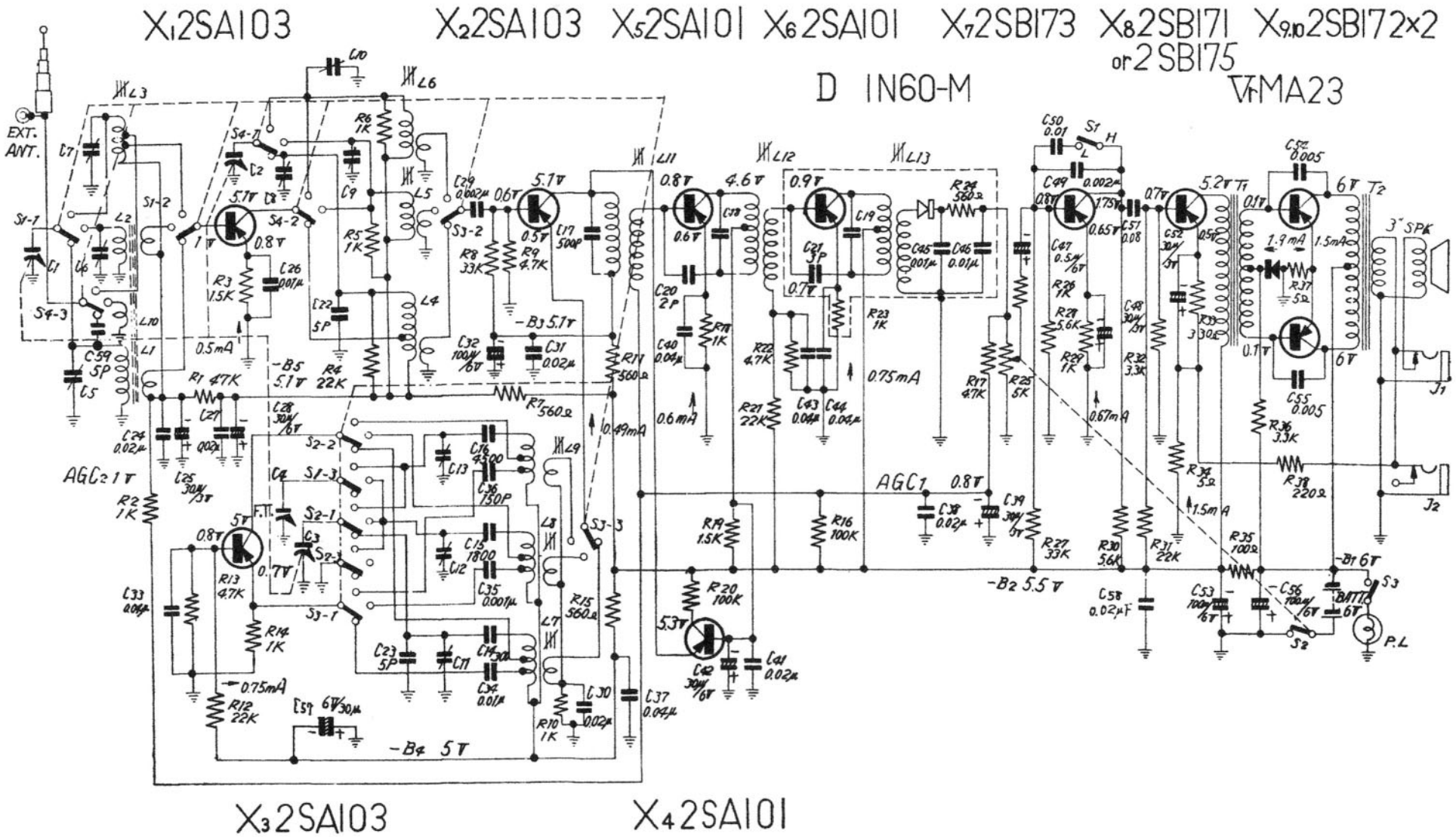
X1 2SA103
X2 2SA103
X5 2SA101
X6 2SA101
X7 2SB173
X8 2SB171 or 2SB175
X9,10 2SB172×2
D 1N60-M
V1 MA23
EXT. ANT.
AGC2 1V
AGC1 0.8V
-B5 5.1V
-B3 5.1V
-B4 5V
-B2 5.5V
-B1 6V
3" SPK
BATT. 6V
P.L
X3 2SA103
X4 2SA101