NIVICO 9TH-2

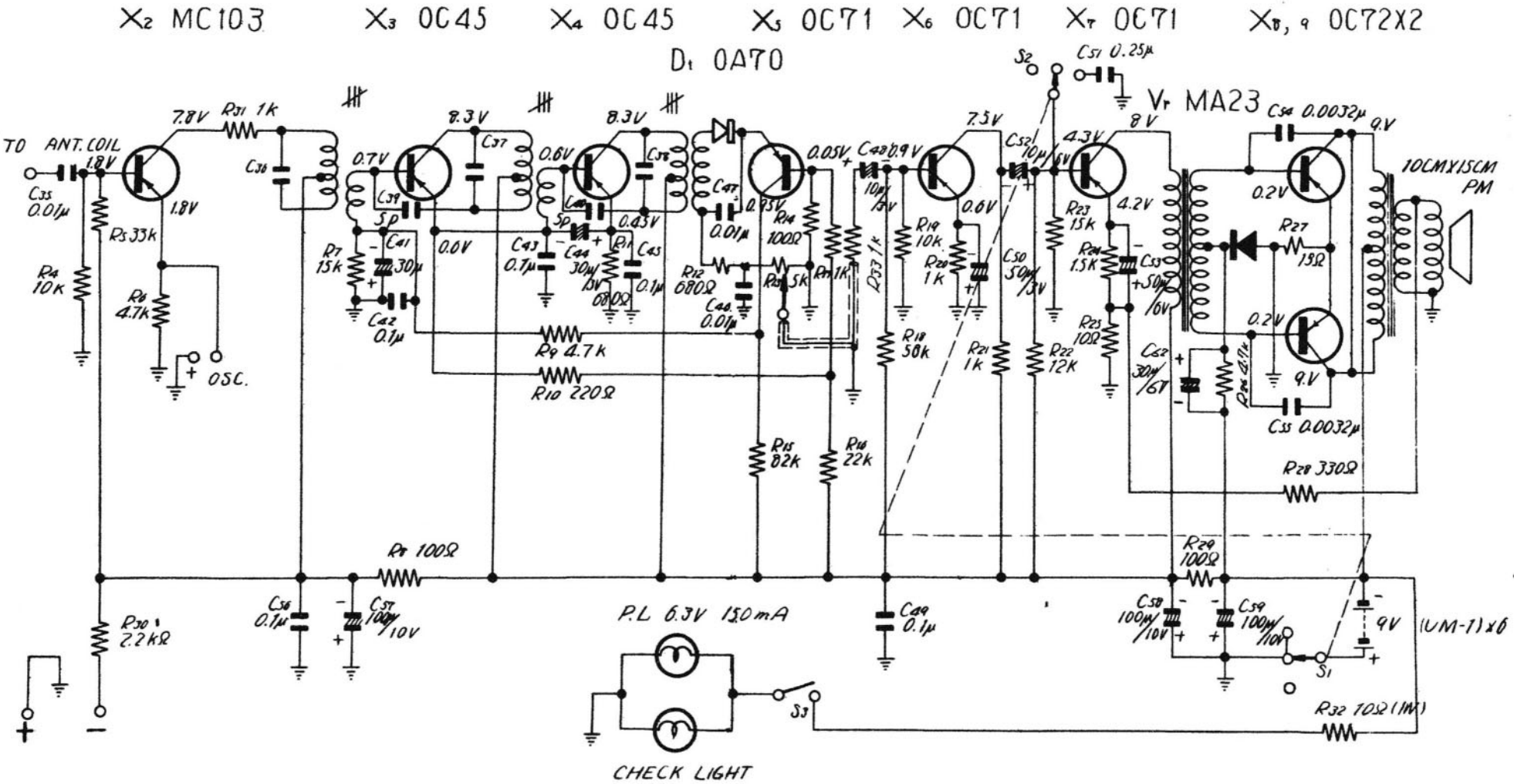
X2 MC103
X3 OC45
X4 OC45
X5 OC71
X6 OC71
X7 OC71
X8, 9 OC72X2
D1 OA70
V1 MA23
TO ANT. COIL
OSC.
P.L 6.3V 150mA
CHECK LIGHT
10CMX15CM PM
(UM-1)x6