VICTOR RADIO MODEL 5A-27

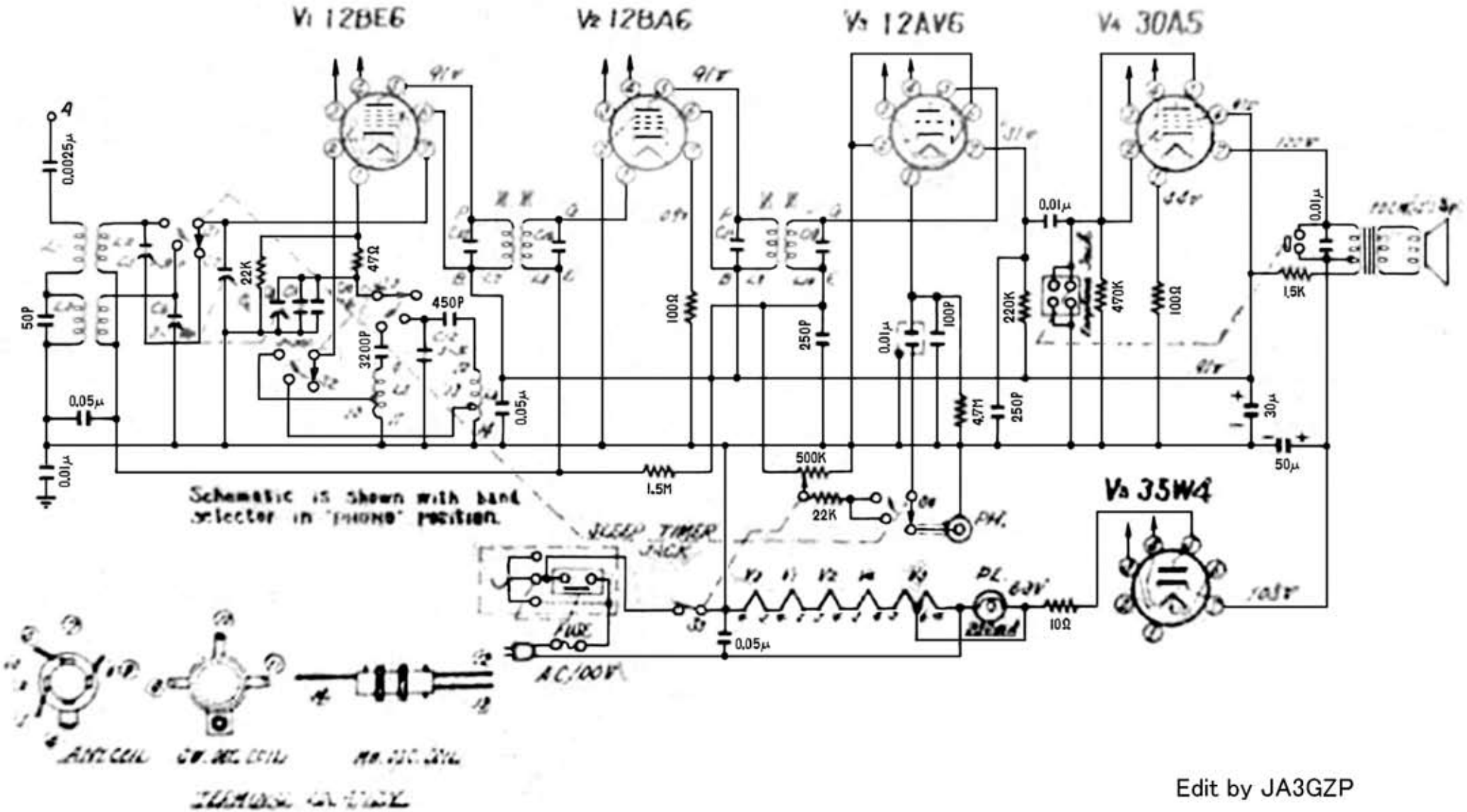

Edit by JA3GZP