VICTOR 6A-2213

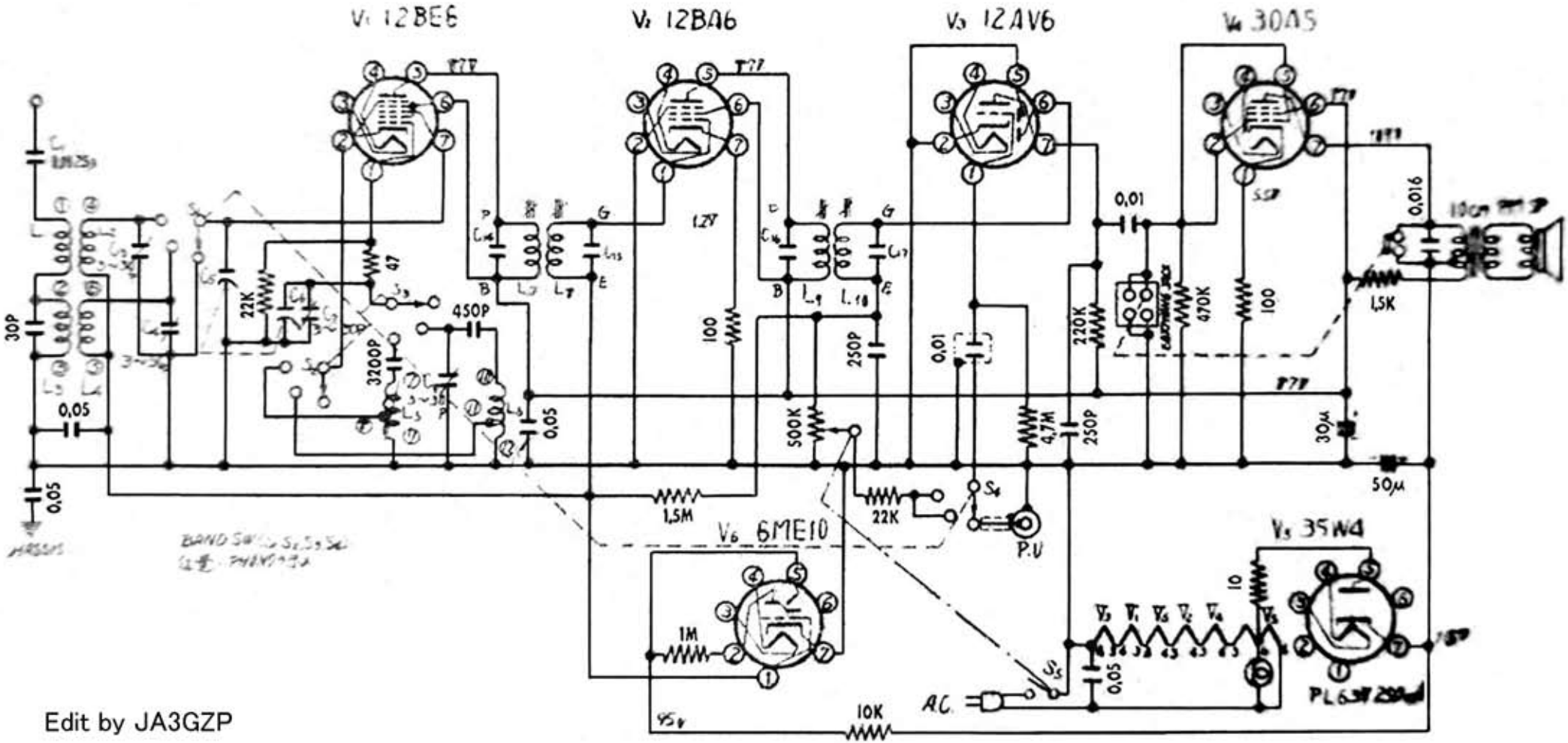

Edit by JA3GZP