VICTOR RADIO

MODEL 6A-2605

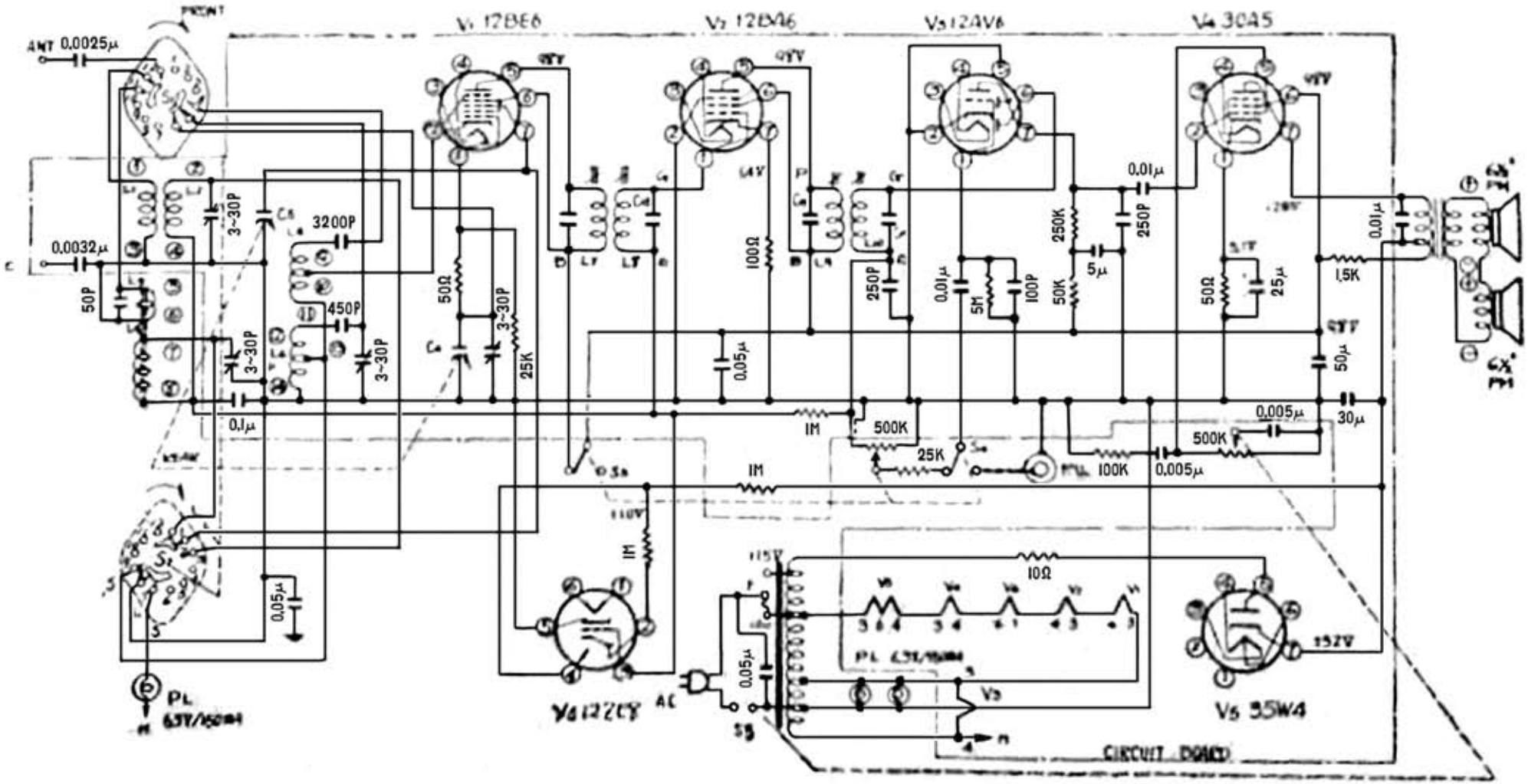

Edit by JA3GZP